The GP710: The First Dual-Protocol ZigBee Chip

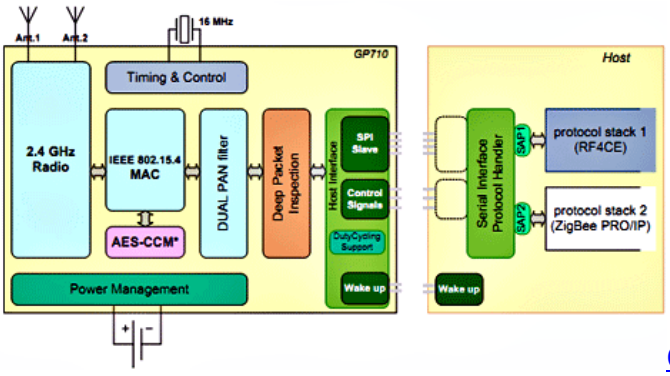

GreenPeak Technologies [1], a leading Smart Home RF-communication semiconductor company, today announced the launch of the new GP710, a dual-protocol ZigBee communications controller with simultaneous support for ZigBee RF4CE and ZigBee IP/ZigBee PRO protocols.

The GP710 communication controller is targeted for set-top boxes, gateways and Smart Home controllers and designed for supporting simultaneously ZigBee RF4CE applications – such as remote controls – as well as ZigBee IP or ZigBee PRO Smart Home applications [2] such as security, home care and energy management.

The benefits of this GreenPeak dual-protocol communication chip are much simpler product design, cost reduction of the total product bill-of-material (single silicon) and a less complex PCB and antenna that makes it simpler and faster for developers to integrate ZigBee into their set-top box or gateway designs.

“The GP710 provides a low cost solution that combines different ZigBee Network protocols into a single chip,” said Cees Links, Founder and CEO [3] of GreenPeak Technologies. “GreenPeak has developed special hardware features to enable multi-protocol support, minimizing the interrupt load on the set-top box processor, and allowing simultaneous RF4CE and other ZigBee protocol operations. This is a first for the industry! Because of GreenPeak’s superior range that covers the whole home and its ultra-low power consumption for long battery life, the GP710 is the best in class choice for integrated low cost Smart Home ZigBee applications.”

Cees Links continues: “Many large operators already support ZigBee RF4CE in the set-top box and remote controls and have an urgent need to broaden the service offering to their customers. GreenPeak’s GP710 communications controller will make new Smart Home service offerings less expensive because new residential applications can all be controlled from the set-top box or gateway using a single device.”

"This solution leverages the growing availability of ZigBee RF4CE in the market,” said Tom Kerber, Director, Research, Home Controls & Energy, Parks Associates. “Adding ZigBee IP/ZigBee Pro to the ZigBee RF4CE silicon will make it easy for

service providers already using ZigBee RF4CE remote controls to add home automation devices - now an area of significant focus by communications service providers."

ZigBee and ZigBee RF4CE, ZigBee PRO and ZigBee IP are trademarks of the ZigBee Alliance [4].

September 05, 2012

Source URL (retrieved on *12/19/2014 - 9:27pm*):
http://www.wirelessdesignmag.com/product-releases/2012/09/gp710-first-dual-protocol-zigbee-chip?qt-digital_editions=0

Links:
[1] http://www.greenpeak.com/
[2] http://www.greenpeak.com/Application/Applications.html
[3] http://www.greenpeak.com/Company/Management.html
[4] http://www.zigbee.org/