Ultra-Small Boost Power Module for Smartphones and Tablets

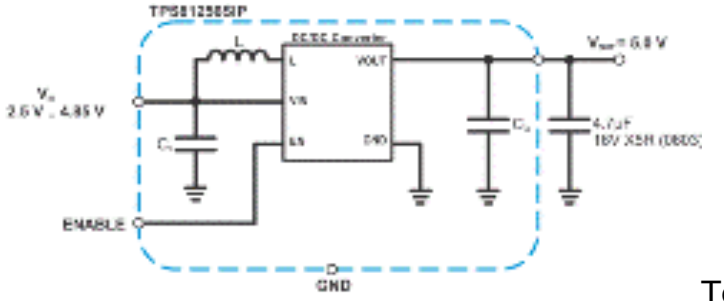

Texas Instruments Incorporated (TI) today introduced the industry's smallest integrated step-up (boost) DC/DC power module for smartphones, tablets and other portable electronics. The new, efficient TPS81256 MicroSiP™ converter integrates the inductor and input/output capacitors to achieve a solution less than 9-mm2 and sub-1 mm height, simplifying design and saving up to 50-percent more board space versus competing solutions. For more information, samples and evaluation module, visit: www.ti.com/tps81256-pr [1].

Smallest integrated boost converter

Smartphone and tablet designers continue to require smaller point-of-load converters, while maintaining long battery run-time with high power conversion efficiency. The 4-MHz, 600-mA TPS81256 module supports a 5-V output with a power density of 400 mW/mm3. The device extends battery life by reducing the supply current to 43 uA during light load operation. The TPS81256 also achieves power efficiency of greater than 90 percent from an input voltage of 2.5 V to 5.5 V, enabling it to efficiently manage 3 W over a full Li-Ion battery voltage range.

Key features and benefits of the TPS81256:

• Smallest solution size: Achieves a solution less than 9 mm2 and profile less than 1-mm tall, providing a power density of 400 mW/mm3.

• Simplifies design: High integration, including passives and capacitors, significantly reduces hardware design and layout effort.

• High performance: Up to 91-percent peak efficiency, and high efficiency over a wide load range.

Broadest range of point-of-load solutions

TI offers the broadest range of power management integrated circuits (ICs) and modules for point-of-load designs, including step-up and step-down converters for portable and line-powered systems. These range from ultra-low power DC/DC

converters with and without integrated FETs to fully integrated power solutions, such as the TPS81K, TPS82K, TPS84K and SIMPLE SWITCHER® modules.

www.ti.com [2]

Posted by Sara Cohen, Editorial Intern

July 17, 2012

Source URL (retrieved on *09/01/2014 - 5:37am*):
http://www.wirelessdesignmag.com/product-releases/2012/07/ultra-small-boost-power-module-smartphones-and-tablets?qt-most_popular=0

Links:
[1] http://www.ti.com/product/tps81256?DCMP=hpa_pmp_mr&HQS=tps81256-pr
[2] http://www.ti.com