RF-DAC Technology Delivers Software-Defined Radio Benefits to Macro- and Small Cell Base Stations

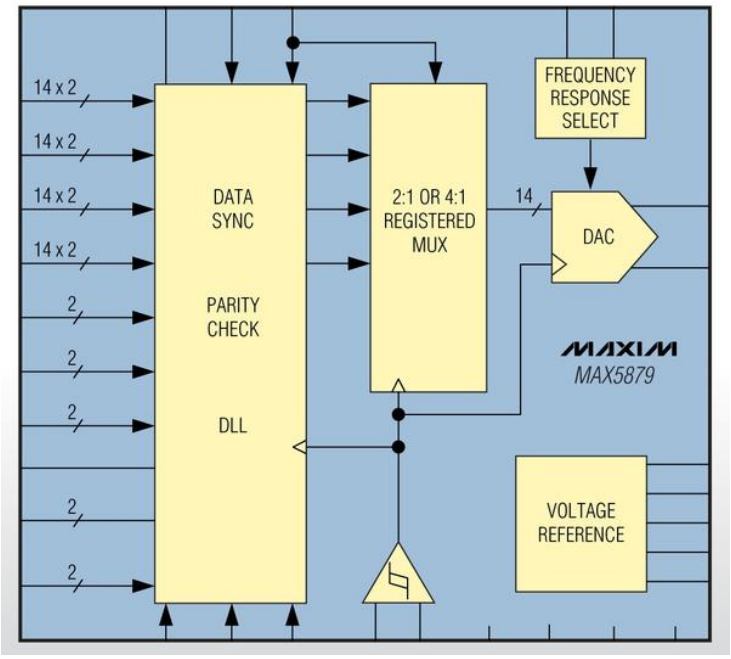

Maxim Integrated Products announces the MAX5879 multi-Nyquist RF digital-to-analog converter (RF DAC) that delivers a fully digital software-defined radio (SDR) transmitter, enabling a common hardware platform for multicarrier, multiband, and multistandard base stations.

Working with FPGA-based direct digital synthesis (DDS), the MAX5879 RF DAC architecture shifts the functions of the analog quadrature modulator and agile local oscillator (LO) used in current architectures into the digital domain. This eliminates in-phase and quadrature errors, and LO feedthrough, commonly associated with analog upconversion. The MAX5879 dramatically simplifies RF design and improves reliability for base-station transmitters.

The MAX5879's selectable frequency response modes support direct RF synthesis of common 3G/4G cellular bands in multiple Nyquist zones from 700MHz to 2.8GHz. A single MAX5879 RF DAC serves multiple standards such as multicarrier GSM, WCDMA and LTE without compromising dynamic performance. This allows designers to use a common hardware platform that cuts development time-to-market.

Benefits of an MAX5879-Enabled Digital Transmitter

• Smart phones and tablet computers demand more bandwidth from wireless base stations. A MAX5879 RF DAC-enabled transmitter delivers much wider bandwidths than traditional architectures.

• The MAX5879's selectable 4:1 and 2:1 input data multiplexer lets hardware designers reduce input word rates, and this allows use of lower-cost FPGAs.

• MAX5879 RF-DAC technology is also ideal for microwave radio links used in mobile backhaul equipment; for CMTS/edge-QAM boxes used in cable head-end equipment; and for other wideband communication systems.

Industry Commentary

• iSuppli Senior Director and Principal Analyst, Jagdish Rebello, said, "OEMs and semiconductor suppliers must focus on developing effective infrastructure solutions that not only meet the current needs of carriers but are also aligned with the 3G/3.5G technology migration paths of the carriers to 4G. Many OEMs are starting to promote Any G to 4G solutions. But to be truly successful, these solutions will need to be flexible to support the changing needs of the operators—with respect to frequency bands and air interface technologies."*

MAX5879 Temperature Range, Packaging, and Availability

• Operation is over the -40°C to +85°C range.

• Packaging is a 256-ball (17mm x 17mm) CSBGA.

MAX5879 RF-DAC is fully released and in production. Contact the factory for pricing.

www.maxim-ic.com

Posted By Sara Cohen, Editorial Intern

June 11, 2012

Source URL (retrieved on *09/01/2014 - 7:27pm*):
http://www.wirelessdesignmag.com/product-releases/2012/06/rf-dac-technology-delivers-software-defined-radio-benefits-macro-and-small-cell-base-stations