Tradeoffs between Single Phase and Three Phase Power

Finding the right fit between individual power module size and overall system load can sometimes be challenging.

By Gary Mulchay, Transistor Devices Inc.

In order to maximize power transfer while minimizing conductor volume, utility power is generally supplied in a three-phase manner, either with or without a neutral

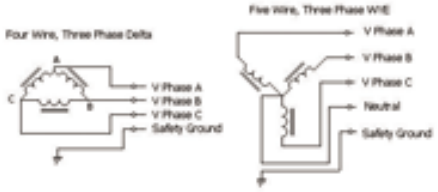

[1]

connection (see Figure 1). Note, when a Neutral is involved, it is generally connected to the installation's safety ground somewhere close to the installation's power entry point.

Common voltages for three phase systems in North America include 4-wire Delta Systems with a phase-to-phase voltage of 208 VAC/60 Hz, or 480 VAC/60 Hz. It is also common to see 480 VAC/60 Hz 5-wire WYE systems with a phase-to-neutral voltage of 277 VAC, or 208/60 Hz 5-wire WYE systems with a phase-to-neutral voltage of 120 VAC. In other parts of the world, typical power line voltages include 50 Hz 5-wire WYE systems with a phase to phase voltage of 398 VAC and a phase-to-neutral voltage of 230 VAC, or a phase-to-phase voltage of 380 V with a phase-to-neutral voltage of 220 V.

Power conversion systems will typically be designed to draw power evenly from each phase so as not to overload wiring, distribution transformers or circuit breakers. Managing the loading of the three phases can be done by connecting apparatus separately to each phase in such a way that loading is balanced, or by using power converters that connect to all three phases simultaneously, automatically providing phase balance. Figure 2 illustrates the two alternate methods.

Single-Phase Input Power Modules

Single-phase modules provide the benefit of simpler and more efficient power conversion circuits, but in order to fully balance line currents, power converters must be implemented in multiples of three. Finding the right fit between individual

power module size and overall system load can sometimes be challenging. If the modules are feeding a common load, then power-sharing circuitry must

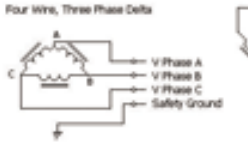

be employed between modules so as to assure equal power drawn from each phase. Power sharing circuits may take the form of a &quotDroop&quot share circuit, where small, non-dissipative synthetic impedances are added in series with each module's output. This will force modules to share current as if one unit's current is greater than the others, its output voltage will drop until its load current matches other units in the system. Alternately, single wire, forced current sharing may be employed, where a separate wire is used to exchange information between modules and the modules will reprogram their output voltage to enable current sharing.

Three Phase Input Modules

Three-phase input modules provide the benefit of easing phase loading management, where the number of supplies is not important. (If fault tolerant redundancy is required, then the minimum number of modules required is two.) However, three-phase modules come at the cost of added complexity and reduced efficiency and reliability at the power module level. If the modules feed a common load, power-sharing circuitry is still desired so as to assure balanced stresses on modules connected in parallel.

Comparison of Approaches

Let us examine some of the reasons that three phase modules are less efficient and reliable. Power conversion efficiency in switching power supplies is a function of the number of switches required to implement the converter, and the voltage and current that these switches must carry.

Likewise, converter reliability will be a function of the number of components required, and the stress levels these components must work at.

A typical single-phase converter is presented in Figure 3. The circuit pictured is typical for power levels above 500 W and employs two converters &#151 one to provide power factor correction and the other to provide galvanic

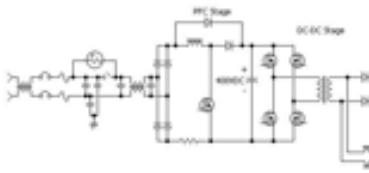

isolation and load voltage matching. In making its way from input to output, power must pass through six switches: Two input bridge diodes, either the PFC Transistor or Boost diode, two DC/DC converter primary switches, and either of two output rectifiers. For a 277 VAC input unit, the voltage rating of all semiconductors on the primary side of the transformer should be at least 600 V for reliable operation.

The circuit in Figure 3 utilizes an &quotinrush limiting&quot circuit comprised of a resistor and bypass relay. These function to limit maximum current drawn from the power line at initial connection of the module to safe levels. Figure 3 also depicts a typical EMI filter between the PFC circuit and power line. This will help limit electro-magnetic emissions from the unit onto the power line.

When connecting multiple single-phase modules from a three-phase power line, they all share the benefit that their PFC output energy storage capacitors (the capacitor that is labeled to have 400 VDC across it in Figure 3) do not share a common return point. This allows unfettered implementation of load-isolating DC/DC converters within the system while not compromising power line phase-to-phase voltage integrity.

One of the challenges in realizing an active power- factor correction circuit from a three-phase line is the tradeoff between resultant output voltage and maintaining the integrity of power line phase-to-phase voltages. The realized solution is not as simple as just taking three single-phase PFC circuits and connecting them in parallel, as doing this requires the three PFC circuits not to share a common output connection. Figure 4 illustrates this point.

In order to share a common return point, three-phase power factor correction circuits are based on three-phase rectifier principal.

The resultant output voltage for this type of circuit is approximately twice the peak voltage observed from line to line. In the case of a 208 Vrms line-to-line voltage, this results in a DC output voltage of 208 &#215 square root(2) &#215 2 = 588 VDC. Power line

Topology	3 Single Phase Converters	2 Three Phase Converters
Number of power modules Number of PFC Switch Transistors	3 3	2 6 (Vienna) 12 (Modified Vienna)
Number of PFC Boost Diodes	3	12
Number of Input Rectifier Diodes Power rating of PFC Sections Number of 400V Energy Storage Devices	12 Po/2 3	16 (Vienna) 12 (Modified Vienna) Po/3 4
Number of 600V rated DC-DC Converter Sections	3	4
Power rating of DC-DC sections	Po/2	Po/2
Number of Inrush Limiting Circuits	3	6

[4]

voltage tolerances will present approximately ±10% beyond this, or 530 to 650 VDC. The significance of this result is that any down stream converter must use components rated at >700 V (800 to 1000 V would be the preferred choice), or multiple lower voltage parts must be connected in series. Insulating space must also be increased to accommodate the increased voltage (over the single phase module case). The net effect is that a circuit of this nature will require

more space, more components and impart greater stresses on the components utilized than what would be encountered in a single phase module.

When a power factor corrected input circuit is employed, the situation gets worse. As power factor corrector circuits force a sinusoidal input current, they generally require an output voltage that is greater than the peak of the input. This will result in even higher voltages that have to be managed.

The Vienna converter relies on the connection to a 3-phase Neutral to provide two power factor corrected outputs that appear in series.

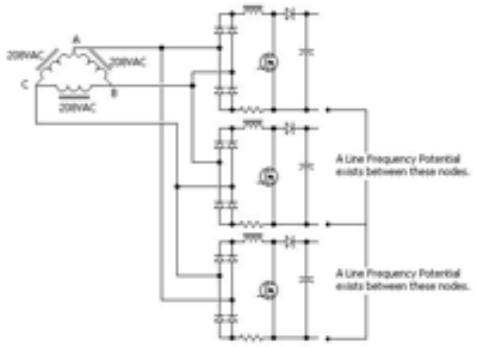

[5]

In both cases, any down stream converter has to either work from 800 VDC, or multiple converters must be connected in series.

A pertinent analysis is to compare the case where three single-phase units are connected in 2+1 redundancy, versus two three-phase units are connected in 1+1 redundancy. Table 1 presents the results of this comparison.

In the case of a module failure, unlike with the 3-phase module, the resulting input phase currents will be imbalanced if a single-phase module fails. In a redundant power module installation, the remaining modules' output power will increase to take up the slack of the failed module. Care must be taken in sizing input wiring and circuit breakers to accommodate this scenario, but the overall burden on the system in terms of cost and size is usually minimal.

Conclusion

Through their optimal use of commercially available components and overall reduced component count and complexity, single-phase power modules provide the best solution for electronic systems that are to be powered from three-phase utility power lines.

About the Author Gary Mulchay is chief technology officer for Transistor Devices Inc. For additional information contact Heather Maguire at heather_maguire@tdipower.com; (908) 850-5088, ext. 317.

Source URL (retrieved on *04/20/2014 - 11:44am*):
http://www.wirelessdesignmag.com/product-releases/2007/10/tradeoffs-between-single-phase-and-three-phase-power?qt-blogs=0

Links:
[1] http://www.wirelessdesignmag.com/sites/wirelessdesignmag.com/files/legacyimages/0706/feat1_1_lrg.gif
[2] http://www.wirelessdesignmag.com/sites/wirelessdesignmag.com/files/legacyimages/0706/feat1_2_lrg.gif
[3] http://www.wirelessdesignmag.com/sites/wirelessdesignmag.com/files/legacyimages/0706/feat1_3_lrg.gif
[4] http://www.wirelessdesignmag.com/sites/wirelessdesignmag.com/files/legacyimages/0706/feat1_4_lrg.gif
[5] http://www.wirelessdesignmag.com/sites/wirelessdesignmag.com/files/legacyimages/0706/feat1_5_lrg.gif