Integrated Front-End Enables Compact Multi-Carrier Base Station Radio

The clear benefit of a compact multi-carrier common radio platform makes it a must-have in the portfolio of an equipment vendor today.

By Lin Wu, Texas Instruments

Wireless base station designers face severe challenges when it comes to delivering future-oriented, yet profitable solutions under dramatic cost pressure. A multi-carrier common radio platform in a small form factor is needed to allow faster time-to-market, as well as save site cost. Selecting semiconductor devices is critical, if not

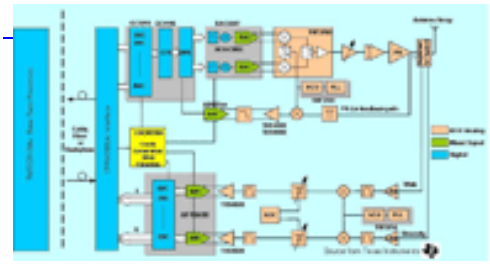

[1]

ultimate, for a radio design. High performance, integrated front ends allow base station designers to access compact solutions with reduced bill of material (BOM) while meeting the stringent requirement of multi-carrier radio. In this article, a highly-integrated, multi-carrier radio example is analyzed with several design methods you an use to improve and optimize the radio performance.

Common Radio Platforms Reduce Cost and Save Space
Today, the convergence between the evolved 3G standards and emerging new wireless standards such as WiMAX has generated the need to adopt a common radio platform across different air interface standards. To equipment vendors, this commodity-like approach allows a large re-use of the research and development (R&D) investment, and offers flexibility to quickly adapt to changes in specification or air interfaces. To operators, common platform radio access networks reduce the potential re-deployment capital spending when a new service is launched. Moreover, with the ever-increasing cost associated with site acquisition in metropolitan areas, it urges the development of compact base stations.

One cost-effective way to build a common radio platform is to use a single signal chain to process any signal bandwidth larger than 10 MHz in the 400 MHz to 4 GHz range. Such a wide frequency range covers the majority of the licensed bands for commercial wireless communication usage worldwide. With more than 10 MHz bandwidth, a multi-carrier radio can process multi-carrier WCDMA, TD-SCDMA or CDMA2000 without additional components.

Compared with single carrier design, this reduced number of components significantly saves board real estate and makes a compact design feasible. An example of a highly-integrated wide band radio with receiving diversity is shown in Figure 1. The AFE8406, DAC5687, TRF3703 and TRF3761 from Texas Instruments are all integrated multi-band components that can be used in such a radio.

Benefits of Using Complex IF Quadrature Modulation
On the transmitter (TX) side, a complex intermediate frequency (IF) quadrature modulation scheme is adopted. A feedback loop is added at the output of the power amplifier (PA) in order to conduct digital pre-distortion (DPD) to linearize the PA, improving its efficiency. On the receiver (RX) side, a high IF sampling is used. TRF3761 is a frequency synthesizer with an integrated voltage controlled oscillator (VCO) to generate the local oscillation (LO) frequency for up and down mixing. When new air interface migration or change in frequency allocation is needed, the only modification to the hardware is the LO frequency and the band pass filter. The reconfiguration of data converter, digital up converter (DUC), digital down converter (DDC), and baseband processing can be easily re-programmed through software.

The DAC5687 is a dual-channel, 16-bit 500 MSPS digital-to-analog converter (DAC) with several integrated digital signal processing blocks. The DAC input is typically generated by a crest factor reduction (CFR) processor such as the GC1115 or a digital pre-distortion processor. With a complex intermediate frequency input, the DAC5687 is used to increase the data rate through interpolation by 2, 4 or 8 and flexibly place the output signal in the spectrum through a digital fine mixing (NCO) and/or coarse mixing stage. The complex DAC5687 output is input to an analog quadrature modulator (AQM) such as the TRF3703. The benefits of using complex IF quadrature modulation are analyzed in Figure 2.

The traditional real IF modulation scheme is shown in Figure 2 in black. On top of the real mixing, the additional blocks needed for complex IF modulation are shown in red. The signal in this example is a non-symmetric, 3-carrier W-CDMA signal with 20 MHz bandwidth.

The RF spectrum with real IF mixing is shown on the upper right. It has an upper sideband and a lower sideband in symmetry with the center at the LO frequency. In this case, the lower sideband suppression is none or 0 dBc. With complex IF modulation, the phase information is maintained all the way up to the RF modulator. This is reflected in a second spectrum with negative lower sideband frequency energy shown in red in the lower right. After the summation, the output at TRF3703, theoretically, will have doubled upper sideband energy and zero lower sideband energy.

Due to I/Q mismatch, the lower side band suppression realistically achieved is 35 dBc without calibration. As a consequence, it is possible to remove LO feed through, sideband and other spurious products in a complex IF system without phase, gain and offset correction. Moreover, in complex IF modulation, the non-harmonic clock-related spurious signals fall out of band of interest, and the DAC second Nyquist zone image is offset further by fDAC compared with fDAC– 2 ??fIF for a real IF

architecture, reducing the need for filtering at the DAC output. Therefore, a simple and direct passive connection between the DAC and the modulator is possible. In contrast, real IF systems rely solely on more stringent active RF filtering to achieve the final, filtered RF transmit signal to meet the spectral mask.

On the RX side, a low-noise amplifier (LNA) provides gain to the incoming signals. It then passes through a band-select filter and rejects out-of-band blockers and interference from adjacent frequency bands. The analog RF mixer then downconverts the desired signal to a convenient IF for digitization. After automatic gain control, additional filtering and amplification, the signal can be processed by an integrated IF to baseband receiver subsystem.

The AFE8406 is an example of a highly-integrated receiver that seamlessly integrates a high-performance, dual-channel, 14-bit, 85 MSPS ADC to digitize the IF spectrum, with an 8-channel DDC that tunes and filters the desired signal. The DDC has been optimized and can be software re-configured for the demanding filtering requirements of wideband standards such as W-CDMA, CDMA2000 and TD-SCDMA base transceiver systems.

One obvious benefit of such integration is that the high-speed board connection between the ADCs and the DDCs is avoided, thus reducing board area and maintaining much better signal integrity. The output of the DDC is a rather low speed channel-filtered digital signal, which is then demodulated by a base band DSP such as TI’s TMS320TCI648x.

Usually the ADC is the most significant noise source in the RX path. The figures of merit for an ADC are signal-to-noise ratio (SNR) and spurious free dynamic range (SFDR). SNR can be

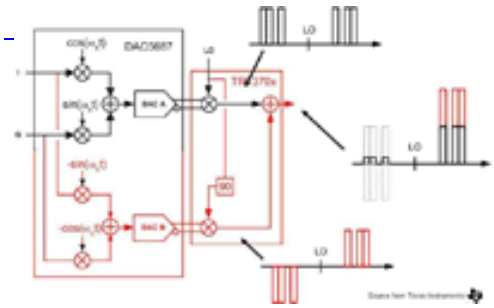

[2]

expressed as the ratio of signal to noise energy in a spectrum. Using SNR, input voltage and termination impedances, the noise figure can be computed. This, when combined with the other RF/IF components of the receiver, determine the overall sensitivity of the receiver. SFDR is the ratio between the root mean square (RMS) amplitude of a single tone, and the RMS amplitude of the worst spur, as the tone is swept through the ADC input range. SFDR determines the signal range an ADC can handle. The AFE8406 has SFDR of 82 dBc at 70 MHz IF and 70 dBc at 140 MHz IF, and SNR of 70 dB at 70 MHz input and 68 dB at 140 MHz input. This level of performance is necessary to provide enough margin for multi-carrier receiver design.

A high IF ADC requires only one RF mixing stage to down convert the RF input signal. This reduces the number of required RF components. More importantly, the capability of using an IF at a higher Nyquist zone helps separate the signal and its image further during down-mixing. This eliminates the need for a costly higher order cutoff image rejection filter. Using W-CDMA design as an example, the incoming RF signal is at 2140 MHz. If an IF of only 70 MHz is used, the LO is at:

2140 MHz &#151 70 MHz = 2070 MHz.

After mixing, the IF signal going into the ADC is at:
2140 MHz &#151 2070 MHz = 70 MHz,

While the image of the RF input signal is at:
2070 MHz &#151 70 MHz = 2000 MHz.

The separation of the RF signal and its image is:
2140 MHz &#151 2000 MHz = 140 MHz, or 2 &#215 70 MHz = 140 MHz

If instead the bandwidth of the ADC can support an IF of 140 MHz, then the separation will be: 2 &#215 140 MHz = 280 MHz.

The roll off of the image rejection filter is two times slower than the 70 MHz IF case. This allows the use of a lower order filter, resulting in a less expensive solution.

Cost-Per-Carrier

From a cost point of view, multi-carrier radio has increased component costs due to the demand for premium RF and mixed-signal analog components that deliver wider bandwidth, lower noise, higher linearity and higher sample rate. Direct comparison of the costs of single carrier designs vs. multi-carrier designs is not realistic due to the complexity in deployment. In rural or lightly populated areas, a single carrier deployment makes the most economic sense. However, a multi-carrier system is more appropriate for moderate to densely populated areas, thus has a higher demand for capacity. The cost-per-carrier will be reduced as more carriers are added. Thus, the operator must evaluate how many carriers are likely to be utilized in a certain scenario before a multi-carrier system becomes cost-effective. A more significant cost advantage for common multi-carrier platform is ease of migration. The costs associated with deploying a new network could be in the billions of dollars, but would be reduced substantially if the radio boards were left unchanged and only the software for the digital up/down conversion and base band DSP needed to be changed.

Conclusion

With the cost-driven nature of the wireless infrastructure market, the clear benefit of a compact multi-carrier common radio platform makes it a must-have in the portfolio of an equipment vendor today. A highly-integrated, mixed-signal front end such as AFE8406, DAC5687, TRF3703 and TRF3761 benefits such radio design with much reduced components. As the IC design and fabrication technology keeps advancing, integrated radio products will keep pushing the limit of base station design.

About the Author

Lin Wu is a product marketing manager with the High-Speed Products group at Texas Instruments.

Source URL (retrieved on *07/22/2014 - 4:27am*):
http://www.wirelessdesignmag.com/product-releases/2007/08/integrated-front-end-enables-compact-multi-carrier-base-station-radio?qt-digital_editions=0

Links:
[1] http://www.wirelessdesignmag.com/sites/wirelessdesignmag.com/files/legacyimages/0708/fe2_1_lrg.gif
[2] http://www.wirelessdesignmag.com/sites/wirelessdesignmag.com/files/legacyimages/0708/fe2_2_lrg.gif