Software Shapes Next-generation RF Instrumentation

The growth of RF technology in the wireless communication industry over the past few years has been astonishing. This year alone, more than 850 million cellular phones will be manufactured and sold around the globe.
As production volumes rise, test engineers are being challenged to increase their test throughput and decrease their cost of test.

By Mike Millhaem

The rapid development of new standards also requires new sourcing and measurement capabilities. One way in which test equipment vendors have risen to the challenge is

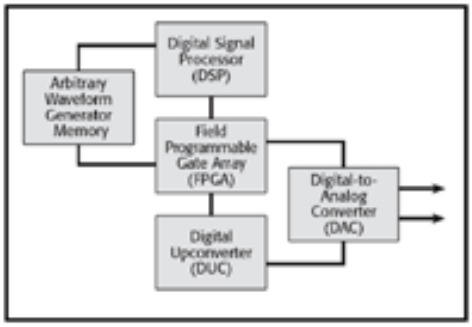

[1]

to design instruments that are more flexible. New technologies like software-defined radio (SDR) architectures let engineers design instruments that are flexible and adaptable to the changing needs of the industry.

The essence of an SDR implementation is that the modulation and demodulation functions performed on RF signals are done by digitizing the signals and using software and processing techniques, rather than dedicated hardware. This approach allows transmitting or receiving a wide variety of signals more economically than with dedicated, modulation-specific hardware.

SDR Requirements
The basic principle of software-defined radio is to replace analog circuitry with digital circuitry that can be programmed via software. Functions that were traditionally done in analog hardware, such as frequency generation and conversion, modulation and demodulation and filtering, are performed with digital hardware. SDR designs also include unique digital functions that can improve the performance of the radio. These functions include decimation and interpolation, which can extend the dynamic range of the radio, and waveform pre-distortion, which can improve the modulation accuracy. In the case of waveform pre-distortion, the modulating signals are modified from the ideal signal to counteract known

analog distortion characteristics.

SDR Components

Traditionally, several types of devices are used to perform these functions. There are two basic groups: signal generation devices, including D/A and A/D converters and direct digital synthesizers (DDSs), and signal processing devices, including digital signal processors (DSPs), digital up/down converters (DUCs/DDCs), field programmable gate arrays (FPGAs) and application specific integrated circuits (ASICs). In addition to these dedicated signal processing devices, general-purpose processors, such as Pentium® or Power PC® chips, can be used.

A/D and D/A converters are key elements of any SDR system. Ideally, no analog frequency conversion is used in SDR systems. To accomplish this, the A/D and D/A converters would create the carrier frequency. However, this is not possible with current converter technology and some analog frequency conversion is still used. The speed and resolution of the converters determines how much analog frequency conversion is required. Converters need sufficient resolution (bits) to produce or capture the modulation data adequately, and more complex modulation formats require converters with even greater resolution. Typical systems today still have one analog frequency conversion.

Digital signal processing is another important part of SDR. DSPs perform several functions traditionally done with analog circuitry, including frequency conversion, modulation, demodulation and filtering. By supporting functions such as waveform pre-distortion and decimation, digital signal processing allows better performance than analog design.

Frequency generation is paramount in any communication system. One frequency-generating technique is known as direct digital synthesis (DDS). It uses a D/A converter to create sine waves at very precise frequencies. DDS allows fast frequency switching at little cost. Advances in semiconductor technology have led to rapid progress in DDS technology, with today’s DDS devices producing sine waves with frequencies of several hundred megahertz with frequency resolution in the microhertz range.

SDR Benefits for Test Instrumentation

While SDR approaches are increasingly popular for applications that demand economical flexibility, such as military communication systems and multi-function mobile base stations, other areas, such as test instrumentation, are benefiting from SDR technology as well. Test instrumentation tends to be complex because the level of performance required to test and measure signals accurately and precisely in cutting-edge systems is high. Production volumes of test instruments are generally lower than high volume items like mobile phones or base stations.

Significant industry developments in digital signal processing provide a high level of capability at a low price. SDR architectures let manufacturers shorten development times, not only for initial products, but also for enhancements and new products based on this architecture. The flexibility of the SDR approach also allows manufacturers to extend instruments easily to meet the requirements of

additional communication standards.

A key benefit users of SDR-based instruments realize is a significant improvement in device test times. In general, there are four primary contributors to test time: device set-up and response time, instrument set-up time, signal acquisition time and data processing time. Ideally, equipment users would prefer the test time to be limited only by the

device under test, not the test equipment. However, typically in RF tests, instrument set-up time and signal processing time tend to be the dominating factors.

One approach to instrument design using SDR addresses both of these issues. Use of high-end signal processing hardware in the source and receiver greatly reduces set-up and processing time. In addition, a digital down conversion extends dynamic range, allowing for shorter signal acquisition time.

Flexibility continues to be an important characteristic in test instrumentation, especially in the area of communications. The most important technical and economic requirements in communication-related test instrumentation include wide modulation and demodulation bandwidth, wide dynamic range, and fast throughput.

In recent years, digital communication systems have changed rapidly, particularly with respect to modulation formats. New standards place increased demands on test instruments such as signal sources to generate new modulation waveforms, while signal analyzers must be able to demodulate and analyze these new waveforms. Also, critical performance parameters vary depending on the particular communications standard, creating the need for new analysis routines.

As a result, demand for test instruments that can be upgraded quickly and easily to accommodate new modulation standards is on the rise. Such flexible instrumentation lowers equipment capital costs because users aren’t forced to buy new units to handle new standards.

Upgradeable instruments are desirable not only from a cost standpoint, but from a time-to-market perspective as well. With communication standards sometimes changing during the development phase, manufacturers can’t afford to wait for the next generation of test equipment to be developed, which can require modification to signal generation and analysis routines.

Such instrument requirements make SDR a viable design approach for next-generation test instrumentation. The same cost and performance tradeoffs valid for generic SDR applications apply equally well to test instruments. Early SDR-based test instruments used either software processing or a field programmable gate array (FPGA) approach. With advances in signal processing devices like DSPs, DDCs and DUCs, using these devices for test instruments is now practical. Furthermore, the use of these devices can provide the best balance of cost and performance.

Lastly, test instrument manufacturers can shorten time-to-market for their products by leveraging the capability of leading-edge signal processing devices and techniques.

Mike Millhaem is principal RF applications engineer for Keithley Instruments, Inc., Santa Rosa, CA.

Source URL (retrieved on *03/08/2014 - 1:23pm*):
http://www.wirelessdesignmag.com/product-releases/2006/11/software-shapes-next-generation-rf-instrumentation?qt-most_popular=0&qt-digital_editions=0

Links:
[1] http://www.wirelessdesignmag.com/sites/wirelessdesignmag.com/files/legacyimages/0611/sup1_1_lrg.gif