Architectures for Mobile RF Convergence

As mobile portable devices, such as cellphones, PDAs and laptop computers, acquire multi mode multi-band wireless connectivity, there is an ever-increasing need for greater levels of RF integration. Space, cost and power-consumption constraints will make it no longer viable to have a separate wireless transceiver for each communication pipe.

By Pieter Hooijmans, Philips Semiconductors

The latest GSM phones are already quad-band, giving users extended coverage on 800 MHz, 900 MHz, 1800 MHz and 1900 MHz GSM bands across five different continents. Many also incorporate Bluetooth wireless technology for headset and SIM card synchronization functions.

They will soon acquire Wi-Fi connections to take advantage of VoIP connections, and receive digital terrestrial television, digital audio broadcasts and GPS satellite information. After that it will be UWB for wireless USB and WiMAX for mobile Internet access. And it won't only be mobile phones that sport these multi-band, multi mode wireless capabilities. Convergence will mean that other combinations will appear in PDAs, laptop computers and gaming consoles. Typical mobile devices may, therefore, need to receive wireless transmissions over a total bandwidth of nearly 6 GHz (see Figure 1).

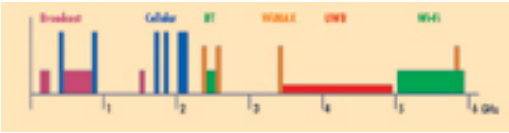

[1]

Figure 1. Portable mobile devices may have to receive wireless transmissions over a total bandwidth of 6 GHz.

The current technique of devoting a separate transceiver, with its own RF and baseband circuitry, to each communication pipe works well, provided the number of communication pipes is small. The increased integration density that has been

made possible by 90 nm CMOS, new passive component integration techniques and RF SiP technology has reduced the size and power consumption of these transceivers to the point where two or three can be accommodated inside lightweight handheld portables.

However, as the number of wireless communication pipes increases, it will no longer be possible to continue using this approach. Not only will the aggregate size of the required modules become difficult to accommodate; their combined power consumption will threaten battery lifetime and the increased silicon content will have an adverse impact on product cost. It will also become increasingly difficult to ensure coexistence of the different radio channels because of the number of mutually interfering antenna required.

Partitioning is Key

The first critical issue is the antenna. The best way to address this problem is for communication pipes that operate in the same frequency band to share the same antenna. It would be logical, for example, to share a single antenna between Bluetooth and IEEE-802.11b/g Wi-Fi transceivers, both of which operate in the 2.4 GHz band. These two interfaces go naturally together in mobile phones anyway, because both will be required to deliver VoIP services &#151 Wi-Fi to connect into a LAN and Bluetooth to maintain a headset connection.

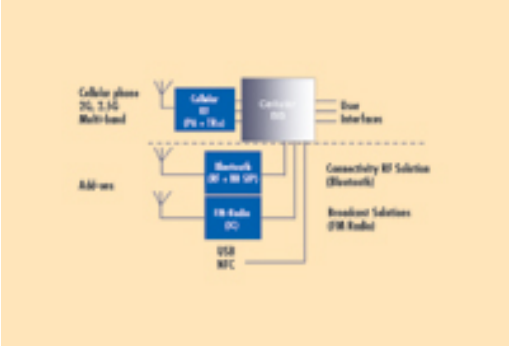

[2]

While secondary communication pipes continue to be add-ons to otherwise stand-alone product designs it is probable that natural combinations such as this will drive their integration. The need to minimize both the hardware and software impacts of these add-ons also means that they will continue to be coupled to the host at as late a stage in the host's baseband processing as possible (see Figure 2). As a result, many modems will continue to be closely associated with their RF transceiver, either integrated into a single-chip RF CMOS solution or delivered as part of an RF SiP.

However, as convergence gathers pace and many of these communication pipes become standard features, the issue of how RF and modem functionality should be partitioned becomes less clear-cut. Modern baseband modems operate in the digital domain, either employing dedicated hardware or a digital signal processor, with the necessary ADCs and DACs positioned between the modem and the RF transceiver. It makes sense, therefore, to shift their functionality into the host's baseband chip, or to at least aggregate the modems into a separate connectivity modem engine.

This not only reduces chip count; it also allows modem and baseband functionality to be quickly migrated from one CMOS process node to the next, thereby reducing silicon area and cost (see Figure 3). At the same time, it allows RF transceivers to be implemented in whatever technology provides the right performance. For 2, 2.5 and 3G mobile phone transceivers this is still likely to be a BiCMOS process for some time to come, although the migration to RF CMOS is beginning today from the 2G segment. For lower performance wireless transceivers it will increasingly be RF CMOS.

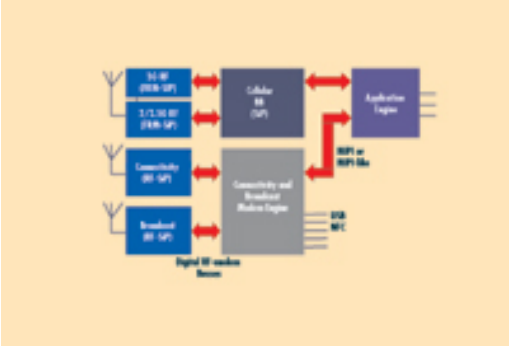

[3]

The alternative is to integrate both the modems and their associated RF transceivers into one large CMOS chip, using the RF capabilities of modern CMOS processes to cope with the RF part. While this offers the potential advantages of a SoC solution, it also has several major disadvantages. Although the advent of RF CMOS means that RF transceivers can be integrated into CMOS, at least for lower complexity wireless links such as Bluetooth and IEEE 802.11b, it is a high-risk approach for multi-band, multi mode solutions.

It has already taken the industry several years to integrate a single Bluetooth transceiver workably onto a single piece of silicon. Integrating multiple transceivers only millimeters apart on the same chip will introduce a totally new set of problems,

especially when several of these transceivers will need to operate simultaneously. In addition, it will be much harder to migrate this combined RF/digital CMOS design to next generation CMOS processes than it will be to migrate a purely digital design. RF CMOS does not scale in the same way that CMOS logic scales and its performance after migration is less predictable. As a result, a significant amount of redesign is likely to be needed.

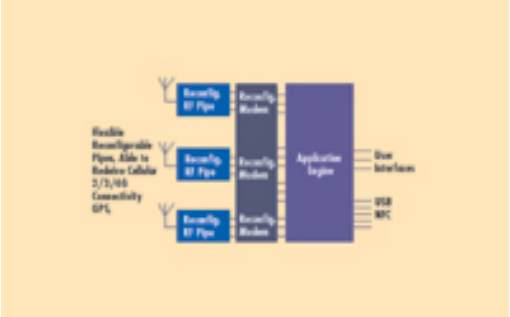

[4]

It is likely that RF and BB SoCs will be primarily a short-term solution, applicable during a phase where few additional communication pipes are connected to the cellular BB host. Over time, however, these SoCs will not support the required level of system integration.

Standardizing the Modem Interface

If the first approach described above of partitioning RF and modem/baseband functionality into separate chips is adopted, what will be needed is a much cleaner and more standardized digital interface between them &#151 if only to reduce the pin-count on the modem engine.

Such an interface will allow a single software-programmable modem to service several different RF transceivers, especially where these different transceivers utilize similar modulation schemes. In the same way that antenna sharing may dictate system partitioning on the RF transceiver side, modulation schemes could dictate system partitioning on the modem side. Narrowband modems such as those required for Bluetooth and GSM/GPRS are typically hard-wired. More complex modems, such as those required for OFDM/CDMA, are typically implemented in (vector) DSPs. It will be a standardized interface between RF transceivers and modems that allows modem partitioning to be exploited to the fullest.

Rather than trying to integrate RF transceivers, modems and application engines on

the same chip, and facing the challenge of keeping the RF CMOS up to speed with baseline CMOS process development, it may therefore make more sense to integrate RF with RF, modem with modem and application processor with application processor.

The MIPI Alliance[1] is already establishing specifications for standard hardware and software digital serial interfaces to mobile application processors. What is needed now is a set of standard RF-to-modem interface specifications similar to the DigRF and DigRF3G specifications being introduced for mobile phones, but for a much wider range of wireless communication standards. Standards like 802.11/g/n, TV-on-Mobile (DVB-H) and WiBro/Wimax would all benefit from such a high-speed serial digital RF-modem interface.

Reconfigurable Radio

The flexibility and software programmability afforded by this partitioning will also provide a migration path to another goal of the future &#151 the concept of reconfigurable radio.[2] Regarded as one of the most promising ways of meeting the demands of ubiquitous wireless communications within the size, power consumption and cost constraints of future mobile devices, reconfigurable radios will allow the same transceiver and modem chain to be re-configured under software control to switch between different frequency bands and different modulation schemes.

One of the biggest challenges in implementing reconfigurable radio will be the replacement of fixed frequency filters by switchable/tunable filters. To maintain the integration levels required in mobile devices, this will involve the development of new RF MEMS devices. It will also require transceiver chains to become much more highly digitized than they are today, not only to present a digital interface to the modem but also to allow transceiver performance to be dynamically optimized to the requirements of different modulation schemes. It is in this area that RF CMOS is likely to play a critical role, together with new transceiver architectures that push the ADCs and DACs closer to the antenna. For the transmit channel, it will also mean the development of Class E (switch-mode), Class G (rail-switching) or Class S (supply-modulated) RF power amplifiers to provide power-efficient wide,bandwidth solutions.

The advantage of reconfigurable radio is that no dedicated solution is required for each communications standard or combination of modes, allowing designs to be easily upgraded by the addition of identical modules. In practice, it is unlikely that such a perfect situation will exist, but it will be possible to cover a very wide range

of communication pipes with just a few groups of solutions (see Figure 4).

Wireless Ubiquity

Wireless communication promises what has become a battle cry for the industry &#151 a world where we can access what we want, when we want and where we want. The problem today is that we are still constrained by the communications pipes. Even if you know what you want, and you know where you can get it, you still need access to the appropriate pipe through which it is delivered &#151 be it a wireless broadband Internet connection, a GPRS- or EDGE-enabled cellular network, a local area network or a plain old telephone line. And all too frequently we still have to get involved in the connection process itself &#151 dialing numbers, logging in, etc.

What will be needed in the future is a seamless system in which all knowledge of the pipes through which communication takes place disappears. No single pipe, even a 4G one when it appears, will be able to maintain the continuous QoS required as we move around our homes, stroll out into the countryside, or travel at high speed down the motorway in our cars. To keep up the seamless flow of information, different pipes will have to cooperate with each other, seamlessly handing over from cellular to local area to satellite networks in such a way that we don't even notice it happening. Reconfigurable radio, with its high level of hardware reuse, is one of the enablers to realizing this vision. It simply will not be economic to have too many radios next to each other, many of which will neither be used continuously or together.

Reconfigurable radio also opens up new possibilities for spectrum usage. In reality, spectrum usage in the field between zero and 10 GHz is typically less than 10%, which means there is an awful lot of bandwidth out there that isn't being used. The problem for wirelessly connected consumer products is that the frequency bands that regulatory bodies force them into using are remarkably narrow. The rest of the frequency spectrum is licensed for use by services such as TV broadcasts or military use. Such restrictions may not be stifling the wireless connectivity industry yet, but as the ubiquity of wireless connectivity increases, they could well do so.

That is why proposals are being made by the FCC to open up licensed frequency bands for unlicensed public use. The proposed system would prioritize usage in these bands, with transmissions such as emergency service communications and licensed usage having higher priority over unlicensed public access. Using this approach, spectrum usage could be tailored to local needs at any point in time,

while ensuring coexistence between systems that share the same frequency bands.

The enabler of this dynamic spectrum allocation is often referred to as &quotcognitive radio&quot because such radios must be able to detect whether a particular frequency band is currently being used and negotiate access to it on the basis of priority. They must be able to operate across several frequency bands and be extremely agile when it comes to changing carrier frequencies and modulation schemes. To do so, the entire transmit/receive chain needs to be made re-configurable, which will require new developments in areas such as multi-band antennas, switchable filters, highly digitized transceivers, advanced vector processors and MAC software.

Also on the horizon are the next generation of highly flexible digital vector processors. These devices will be able to execute software codecs, modems and channel-filtering functions for a very wide range of transmission standards. Combined with the RF circuit architectures needed for end-to-end reconfigurability, these devices and architectures promise to bring us one step closer to wireless ubiquity.

However, the ultimate objective is to develop a transceiver/baseband architecture that can not only switch between standards, but can also operate on multiple standards simultaneously &#151 exactly what's needed for cognitive radios of the future.

Endnotes

1. Mobile Industry Processor Interface (http://www.mipi.org [5])
2. Reconfigurable radio is also referred to as Software-defined radio (SDR)

Source URL (retrieved on *05/21/2013 - 5:20am*):
http://www.wirelessdesignmag.com/product-releases/2006/04/architectures-mobile-rf-convergence

Links:
[1] http://www.wirelessdesignmag.com/sites/wirelessdesignmag.com/files/legacyimages/0604/wd64_coverstory1_lrg.jpg

[2] http://www.wirelessdesignmag.com/sites/wirelessdesignmag.com/files/legacyimages/0604/wd64_coverstory2_lrg.jpg
[3] http://www.wirelessdesignmag.com/sites/wirelessdesignmag.com/files/legacyimages/0604/wd64_coverstory3_lrg.jpg
[4] http://www.wirelessdesignmag.com/sites/wirelessdesignmag.com/files/legacyimages/0604/wd64_coverstory4_lrg.jpg
[5] http://www.mipi.org