Integrating Technology for Mobile Phones

Integrating passive and active components improves mobile phone performance.

By S. Mosquera Duran, STMicroelectronics
With the constant evolution of the mobile phone market towards higher integration and ever more added value solutions, the patented IPAD&#153 technology (Integrated Passive and Active Devices) has now become a full-fledged technology.

By combining different types of passive and active elements on a monolithic silicon substrate, IPAD products can integrate various functions required by mobile phone applications, such as ESD protection diodes, EMI low-pass filters, line terminations, pull-up or pull-down resistors, logic switches, and RF components.

Superior Electrical Performance

Portable devices such as cellular phones, have several data and/or audio ports used to connect external devices, for example external microphone, music player, camera, external memory, or Multimedia Cards. All these I/O interfaces are considered as potential sources and entry points for conducted and radiated EMI (Electromagnetic Interferences) or ESD (electrostatic discharges), which have to be totally suppressed.

So far, discrete components have been extensively used to achieve ESD protection and EMI filter functions. From the performance point of view and regarding the board space saving trend, this solution is now largely out-performed.

With the integrated EMI low-pass filters, IPAD technology allows the rejection of a wide radiated high frequency spectrum that can prevent equipment from passing EMC (electromagnetic compatibility) standards. Figure 1 presents an example of IPAD filter attenuation performance obtained with the EMIF product series, in comparison with 33-pF discrete capacitances. The EMIF devices offer the advantage of attenuating unwanted signals on a much wider frequency band.

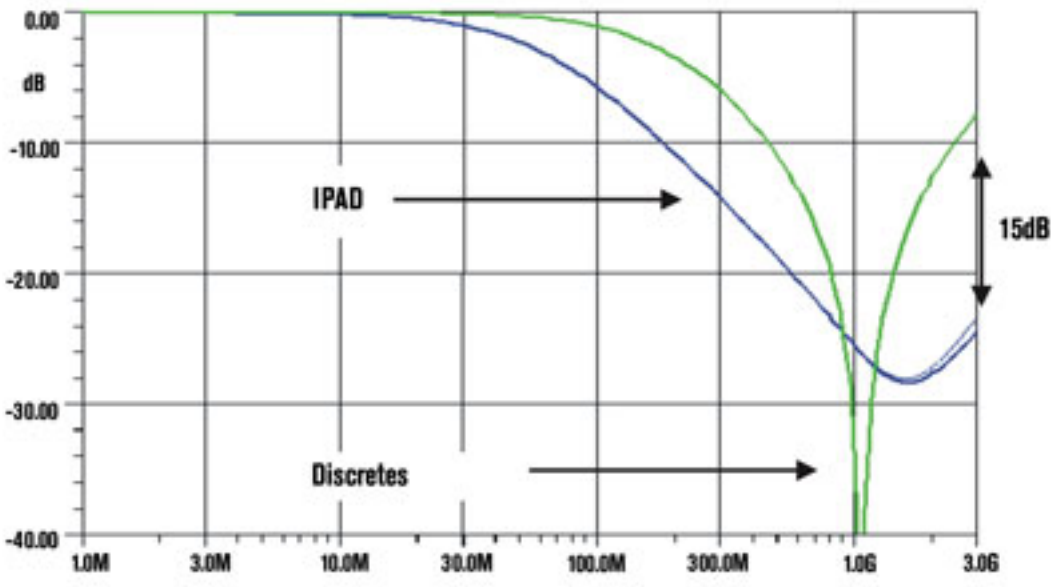

Figure 1. Comparative attenuation performance of IPAD circuit versus passive discretes.

The attenuation curve for the discrete solution using capacitors shows a high attenuation for the very narrow resonance frequency and a low attenuation for the higher frequencies. The discrete solution is of lower efficiency for exchange protocols like Bluetooth or Wi-Fi.

The IPAD device demonstrates a good effectiveness in the 800 MHz to 3 GHz range with an attenuation lower than &#150 25 dB. So, the IPAD low-pass filter rejects the unwanted RF component of the GSM, DCS, or Bluetooth signals, avoiding that these rerouted signals affect the baseband chipset and the RF blocks.

In addition to the noise filtering function, the IPAD technology also provides ESD protection in compliance with the IEC61000-4-2 level 4 specification, e.g. 8 kV by contact discharge or 15 kV by air discharge. Thanks to the integrated double clamping structure, the voltage at the device output is reduced down to 10 volts when a 15 kV ESD surge is applied.

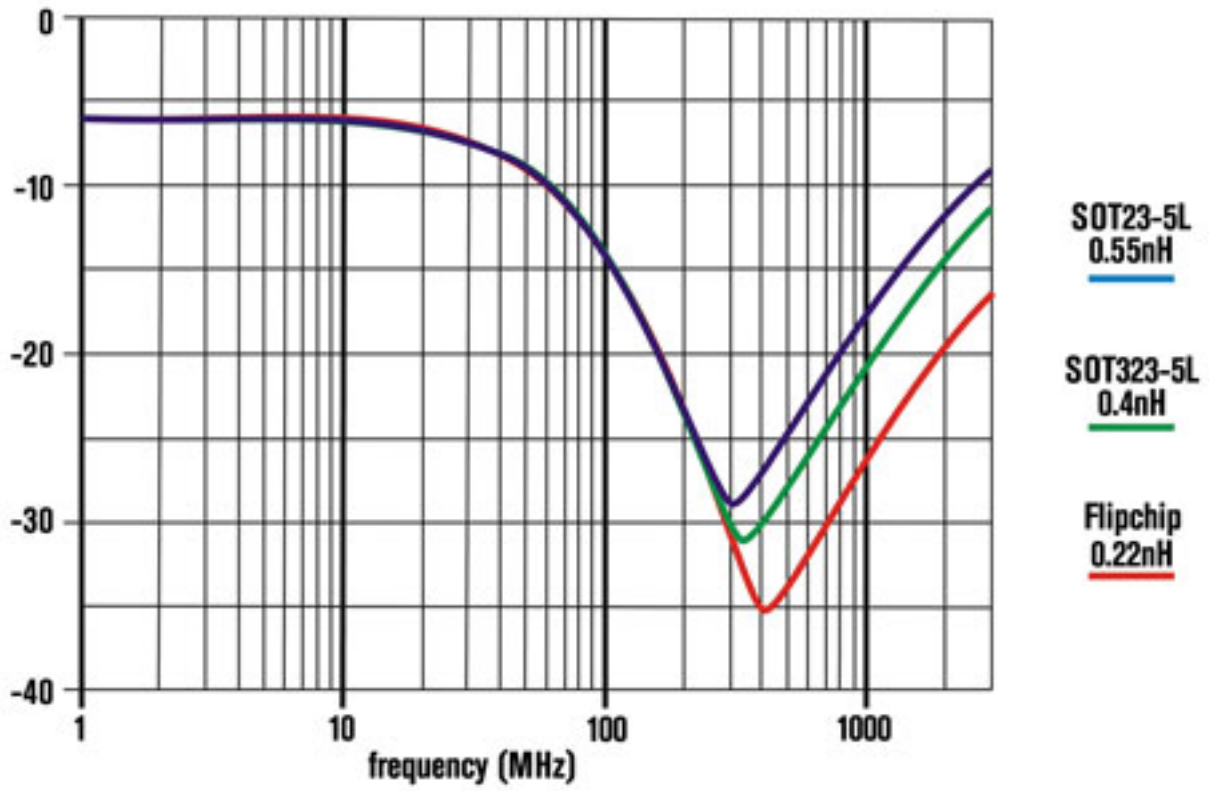

Figure 2. Comparative filtering performance between SOT type and Flip-Chip packages.

Description

The excellent results in EMI filtering and ESD protection are obtained thanks to a dual Zener cell configuration designed to achieve these two functions. This structure is highly suitable when designers are facing board space constraints, especially when the Flip-Chip packaging is used.

IPAD technology is obviously not restricted to dual Zener cell integration. Several other components can also be integrated. In this way, it gives designers the possibility to bring more added value to their system by combining pull-up or pull-down resistors, coupling or decoupling capacitors, Schottky diodes, small-signal transistors, PIN or varicap diodes.

High Integration Capability

IPAD products are taking the advantage on integrated passive arrays and networks that were previously used over discrete components. Space saving is estimated between 50% and 80% when compared to standard discretes. So this technology becomes very attractive when one considers the combined electrical and dimensional performance.

The space required by a 10-line filter plus ESD protection for a discrete solution is 19 mm^2 of board space whereas the EMIF10-1K010FI IPAD device, in a Flip-Chip package, uses 6.8 mm^2 of board space, saving 12.2 mm^2.

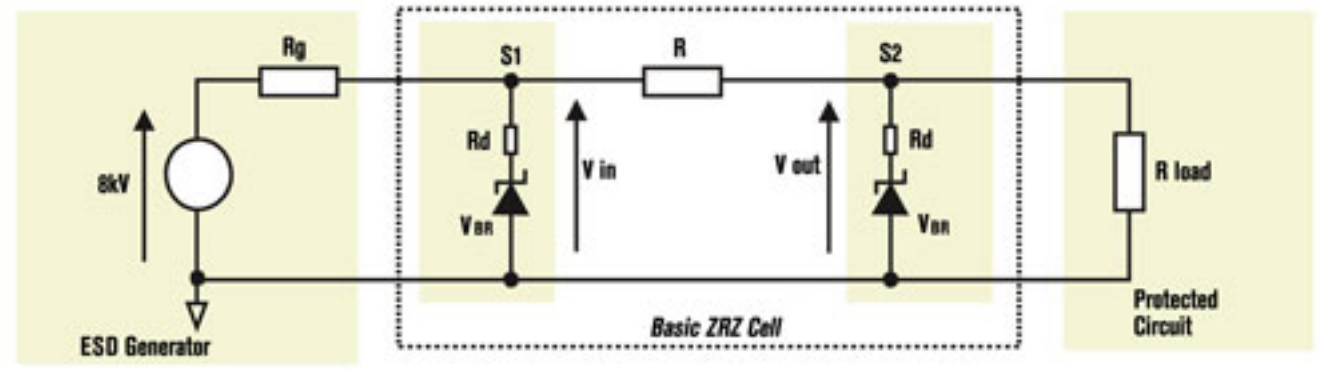

Figure 3. Equivalent schematic of the basic ZRZ cell structure for ESD suppression.

Effect of Packaging on IPAD

With the highest functional density by square millimeter, IPAD circuits are perfectly suitable for high-density boards. To obtain the most from IPAD technology, the Flip-Chip and QFN packages are used. Thanks to their reduced parasitic inductance, these packages contribute to the electrical performance by minimizing the effect of unwanted high-frequency parasitic elements.

The Flip-Chip packaging offers the highest performance for the IPAD technology. By construction, the intrinsic parasitic inductance for a typical Flip-Chip package is in the range of 0.20 nH per bump, a much lower value than the 0.40 nH par lead characterizing the SOT-323 plastic package. The contribution of this low parasitic inductance value to the filtering performance is presented in Figure 3 and the attenuation gain can be estimated by around 15% in comparison with the SOT-323 package.

Figure 2 also shows that the filtering performance rises to &#150 20 dB at 800 MHz with a SOT-23 package which has its parasitic inductance value at 0.55 nH per lead, while with the Flip-chip, the filter response is of &#150 28 dB at the same frequency. The improvement is in this case around 25%.

IPAD Application Examples

1.1. SIM CARD Interface

The SIM card interface (Subscriber Identify Module) is a removable CPU plus memory module commonly used in a mobile phone. This memory card is inserted by the end user via a connector on the backside of the phone which exposes this SIM interface to hazardous ESD surges and to the RF signal transmitted by the

antenna.

To avoid any damage caused by ESD or pollution due to unwanted radio frequency through the SIM connector, mobile phone designers generally implement combined ESD protection solutions and EMI filter circuits between the connector and the SIM Card IC.

In addition to the ESD protection function, the integrated low pass filter also rejects the RF signals on the each data line: reset, clock, and I/O. This filter is also suitable for the GSM, DCS, and Bluetooth frequencies and provides line impedance matching impedance by using low tolerance resistor integration technology.

The line capacitance has been adjusted to not exceed 50 ns fall time and rise time according to the GSM11.1x standard recommendation.

By using the IPAD technology, the designers can implement a complete integrated ESD and EMI filtering solution which provide rejection of the RF signals on each data line: reset, clock, and I/O. This filter is also suitable for the GSM, DCS, and Bluetooth frequencies and provides line impedance matching impedance by using low tolerance resistor integration technology.

The line capacitance has been adjusted to not exceed 50 ns fall time and rise time according to the GSM11.1x standard recommendation.

In addition to the filtering behavior and thanks to a dual integrated Zener structure, the ESD protection is split in two complementary stages. As shown in Figure 3, theESD surges can be clamped by the first stage S1 and the remaining voltage is then applied to the second stage S2 through the resistor R. This symmetrical structure makes the output voltage very low (see Figure 3).

The equation giving the output voltage for a clamping stage is:
V clamping = $V_{br} + R_d * I_p$

where V_{br} is the diode breakdown voltage, R_d is a dynamic resistance of the diodes, and I_p is the ESD Peak current.

Taking into account the hypothesis that the dynamic resistance of the diodes are negligible in comparison with the filter resistance R and the load resistance R_{load}, the Voutput can be calculated with the following formula:
$V_{output} = (R \cdot V_{br} + R_d \cdot V_{input}) / R$,
where $V_{input} = (R_g \cdot V_{br} + R_d \cdot V_g) / R$

Considering the electrical characteristics of the circuit, the calculation gives V_{output} = 8.4 volts for a 8 kV discharge applied with the ESD generator. So this voltage remains a safe value when over-voltages occur and confirms the IPAD technology high performance level.

1.2. USB Connection in Mobile Phone

The USB (Universal Serial Bus) is becoming one way of connecting mobile phones to a wide range of consumer or computer applications like laptops, PDAs, or cameras. USB gives the advantage of combining low speed and high-speed bus activity up to 12 Mbps, which is 100 times faster than a serial port. This data exchange protocol is also able to automatically detect a connection to a peripheral without any shutdown operation.

On one hand, this plug-and-play capability exposes the system and the USB connector to human interactions, which can generate damaging ESD discharge by simple contact. So, the USB connections have to comply with the IEC61000 level 4 standard.

On the other hand, and especially when we are considering wireless applications, the USB connector is also considered as a vulnerable entry point for re-routed RF signals, which can cause perturbations on the USB hub. This RF interaction must be suppressed by using EMI filters to comply with the FCC part 15 or the CISPR publication 22.

On the other hand, and especially when we are considering wireless applications, the USB connector is also considered as a vulnerable entry point for re-routed RF signals, which can cause perturbations on the USB hub. This RF interaction must be suppressed by using EMI filters to comply with the FCC part 15 or the CISPR publication 22.

IPAD technology also meets the requirements of the USB 1.1 specification for the USB I/O lines with respect to EMI filtering and line termination. In addition to EMI filtering, line termination, and the pull-up resistor integration, the IPAD technology also features ESD Protection according to IEC61000-4-2 level 4, all integrated in a monolithic solution.

Figure 4 presents an example of circuit implementation schematic (EMIF02-USB01). All features mentioned are provided on a 2.6 mm^2 piece of silicon mounted in a Flip-Chip.

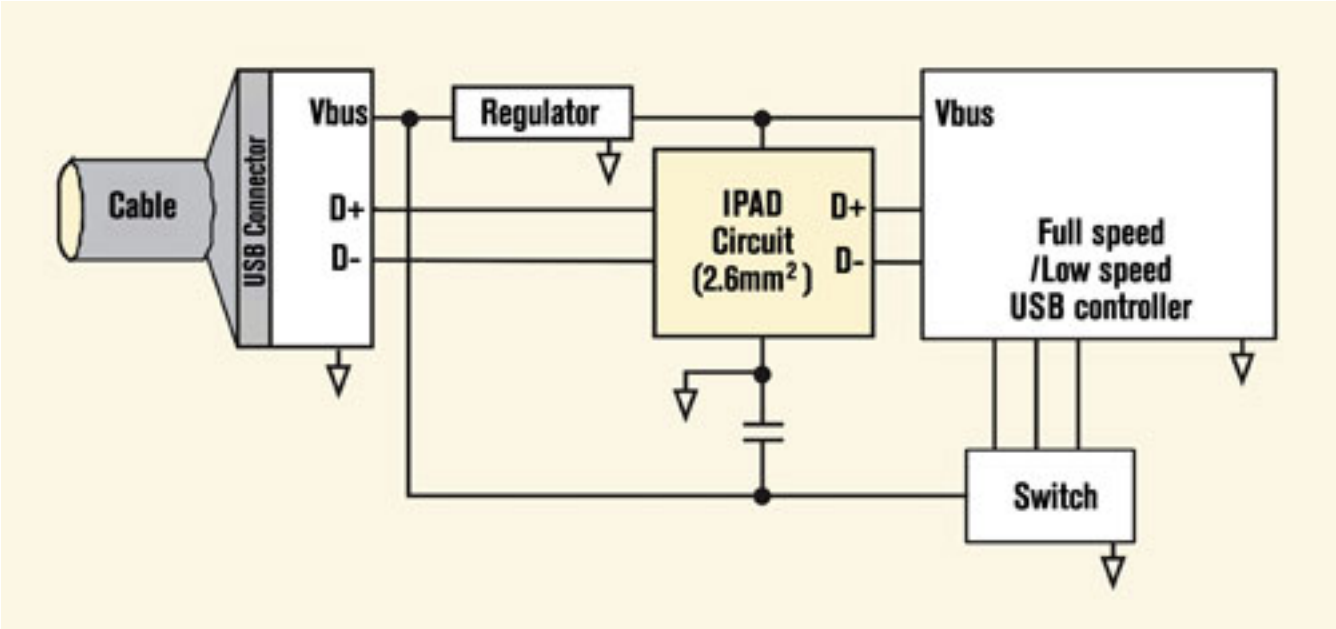

Figure 4. USB filter EMIF02-USB01 for mobile phone implementation schematic.

Compared to the SOT-323 package, the Flip-Chip package offers up to 40% board space saving and better electrical performance in terms of filtering behavior.

A USB line termination can be achieved through serial resistors connected to the data lines. These resistors match the USB cable impedance to assure the proper termination to maintain the integrity of the signal.

The pull-up resistor on D+ and D- lines is required to identify the equipment as a full-speed or low-speed device. Thanks to the IPAD technology, this resistor has been incorporated into the silicon structure and with a 5% tolerance as required by the USB1.1 specification.

In this example, the low-pass filter is formed by a combination between the serial resistors and the dual clamping diode structure in parallel on the I/O lines. In this configuration, the RC filter network provides a frequency attenuation of - 25 dB at 1 GHz.

In addition to the radiated EMI function, the circuit in the above example passes the IEC61000-4-5 level 4 tests by using ESD bi-directional diodes placed on each of the I/O data lines.

The design of the USB application is critical to meet the ESD and EMI filtering standard requirements. The presented IPAD in Flip-Chip package will allow new mobile phones equipped with a USB connection to comply with the corresponding standards and provides a fully integrated solution including impedance matching and pull-up resistors at the same time. In addition, the design of the silicon structure has been optimized to reach the 50 pF capacitance required by the USB1.1 specification.

Thanks to the IPAD technology, such a solution becomes very attractive when designers look for high electrical performance and have to save board space.

S. Mosquera Duran is the ASD & Discretes Telecom Product Marketing Engineer for STMicroelectronics. Additional information on IPAD technology can be obtained on ST website at www.st.com/ipad.

Source URL (retrieved on *03/10/2014 - 2:24pm*):
http://www.wirelessdesignmag.com/product-releases/2003/01/integrating-technology-mobile-phones?qt-blogs=0