Compact Wireless Modules

Incorporatingcellular technology into existing products can be a daunting task.

By Hany Neoman, Wavecom, Inc.

Cellular technology is evolving into a powerful data-communications service. Ever expanding applications in personal communication devices, telematics, machine-to- machine, and mobile computing are leading the way. Cellular capability adds functionality to PDAs and notebook PCs, allowing mobile users to access e-mail. Automotive applications include vehicle location tracking (using GPS) and remote engine monitoring. Machine-to-machine applications are unlimited: Vending machines can call-in to report sales or inventory levels, while utilities can read meters remotely.

Despite the growth in data applications, the cellular handset continues to be the highest-volume application for cellular technology. Voice services will probably dominate cellular communications for some time to come. Even so, the nature of the handset is changing as high-bandwidth data services become available, enabling many new features and applications. Voice leaves little opportunity for differentiation in handsets. Add data capability, though, and the range of features, functions, and form factors becomes infinite. The result is many new opportunities for manufacturers to target specific users with products designed to particular lifestyles, regional or cultural preferences, or vertical markets.

Taking advantage of these new opportunities is not so easy, however. Cellular handset manufacturers typically have designed their products for mass markets, manufacturing tens or even hundreds of millions of units in a given design. Such high volumes justify the immense financial and engineering resources needed to develop a state-of-the-art wireless product. Manufacturers seeking to incorporate cellular technology into existing products, or to develop niche products for comparatively small markets, face a daunting set of challenges.

Wireless Adds Complexity

A digital cellular radio (for voice or data) is a system in its own right, incorporating microwave, mixed-signal, and digital hardware technologies along with some very complex software. As an example, Figure 1 illustrates the addition of a cellular wireless module to a PDA.

Figure 1. The number of complex components in a cellular subsystem (green blocks) is similar to the number of such components in a PDA (blue blocks). The RF components bring additional complexities in PCB design, due to the high frequencies involved.

Because of the complexity of the cellular, be it GSM or CDMA, sub-system, and the need to isolate RF devices from other components to avoid interference, the cellular sub-system typically is implemented on a separate board, or as a well-defined section of the main board. The cellular sub-system rivals the PDA in complexity, even without considering the circuit-design and board-layout complications that come with microwave frequencies. Add the need to develop or integrate baseband software and interface to the host device, and the project becomes more than a little intimidating.

Chipset Solutions

Assuming that developing custom RF and baseband ICs is out of the question for most companies, the solution favored by most designers is to start with a commercially available chipset and a reference design from the chipset manufacturer. Using a chipset, especially a complete offering (including the radio, baseband processor, and any supporting components such as power amplifiers) can significantly reduce the costs and risks of developing a cellular system. A chipset can provide the core components, but the product design team will have much work to do to get a working cellular device finished and into production.

System architecture design - How will the radio and baseband ICs, other hardware components, and software combine to make a properly functioning system, interfaced to the host device and meeting the requirements of the intended applications?

RF circuit design and PCB layout - While chipsets reduce the need for this complicated and risky design function, they do not eliminate it. RF circuit design expertise is not usually available in companies that manufacture digital devices such as PDAs or portable PCs. In addition, the test equipment needed for such design tasks is expensive, and purchasing lead times can be long. A reference design from the chipset manufacturer can help, but getting the RF circuitry to work properly often takes several iterations, even for experienced RF engineers.

General design and board layout - The RF and baseband ICs will need supporting

circuitry, such as power supply regulators, power management circuits, and crystal oscillators. The PCB design must include shielding and electrically isolating the RF components from other components, to avoid problems with interference and spurious radiation. As with the RF circuits, achieving satisfactory performance is likely to take several PCB iterations.

Software integration and testing - Even when obtaining a protocol stack from the chipset vendor, the developer must still adapt it to the particular system implementation and host interface, and then test to assure compliance with the applicable communications standards.

IP licensing - The developer will have to negotiate licenses for the reference design and other IP, such as GSM or CDMA essential technology.

Compliance testing - All cellular devices must comply with government regulatory agency restrictions on radiated power, spurious emissions, and SAR (specific absorption rate). In addition to the government regulations, each device must meet the specifications set by the standards bodies for the applicable communications technologies (e.g., GSM, CDMA). If a product incorporating a cellular system will be sold in several countries, it must be tested for compliance with each country's regulations.

Given the above design and testing tasks, the resources needed to develop a cellular sub-system from concept to production are considerable, even when starting with a chipset. For example, typical development might involve 50 to 100 engineers, depending on the amount of software required, and could take 18 months to complete.

If the product is to support multiple communications standards (e.g., GSM, CDMA, or multiple frequency bands), as might be necessary to address different geographical markets or carriers' requirements, the resource requirements, costs, and risks are compounded.

The extensive resource requirements, long time-to-revenue, and the technical and economic risks of wireless product development can keep cellular data capability out of many products that would benefit from such connectivity.

Wireless Modules

A module containing a complete cellular system would be a welcome alternative to the chipset approach. Unfortunately, modules typically have been rather bulky, incomplete, or difficult to use in high-volume, automated production. However, new packaging techniques and attention to the needs of portable-device designers have resulted in the availability of small, single-component, pick-and-place surface-mountable modules that comprise a complete cellular communications (voice and data) subsystem. Using such a module can drastically reduce the costs, risks, and time associated with wireless product development.

Choosing a cellular module solution eliminates essentially all of the cellular subsystem design tasks, and much of the regulatory and standards testing as well. That reduces development costs enormously. It also allows the product's designers to concentrate on features and functions that add value and differentiate the product from competitors.

Perhaps the greatest benefit of using a module is reduced time to revenue. Adding cellular-communications capability to a product, or developing a cellular

handset, typically takes about 18 months. Using a module can allow product introduction as much as a year earlier, compared to using a chipset solution. The result is not only a greater overall revenue opportunity, due to the earlier introduction, but improved margins as well. (See Figure 2)

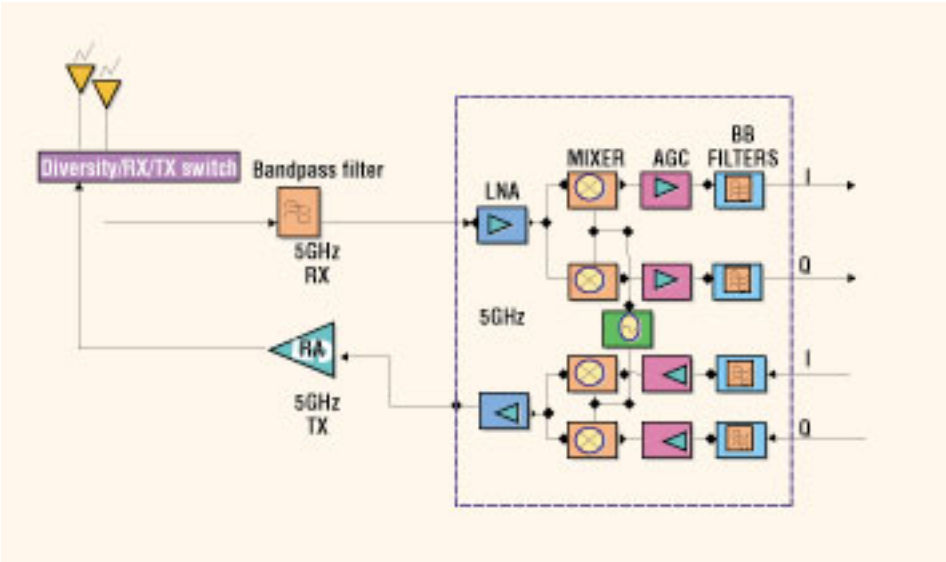

Figure 2. Time-to market implications of module and chipset approaches to wireless product development. The area under the revenue-expense line illustrates the dramatic difference in development cost for the two approaches.

The ability to rapidly deploy wireless-enabled products into multiple geographic or demographic markets is another advantage of the module approach, especially if modules supporting different wireless standards are available with identical form factors.

Wireless Made Simple

Compared to the complex process of developing a wireless subsystem in-house from a chipset, incorporating a cellular module into an existing product or a new design is quite simple. The key to a successful implementation is to select a vendor that not only offers a range of suitable modules, preferably supporting all major cellular standards, but that also offers assistance with the integration process. Although a module essentially eliminates the need to get involved in RF circuit design, adding a radio to any device requires some experience with antennas and shielding techniques, especially when the product must meet strict regulatory and standards-body specifications. A vendor that is willing to work with the designer in those areas can really take the risks out of the design process, making wireless product development fast and painless.

The ideal module is essentially a complete phone, minus peripherals such as a microphone, speaker, keypad, and display, that can communicate with the host device via a simple, preferably standardized interface such as the popular "AT" command set developed for modems.

As an example, Wavecom's WISMO Quik and WISMO Pac modules incorporate all of the essential elements of a cellular subsystem &#151 radio, baseband, and digital hardware plus software &#151 needed for a complete wireless system in single devices that measure 58 &#215 32 &#215 3.9 mm and 45 &#215 32.5

&#215 55 mm, respectively. (See Figure 3)

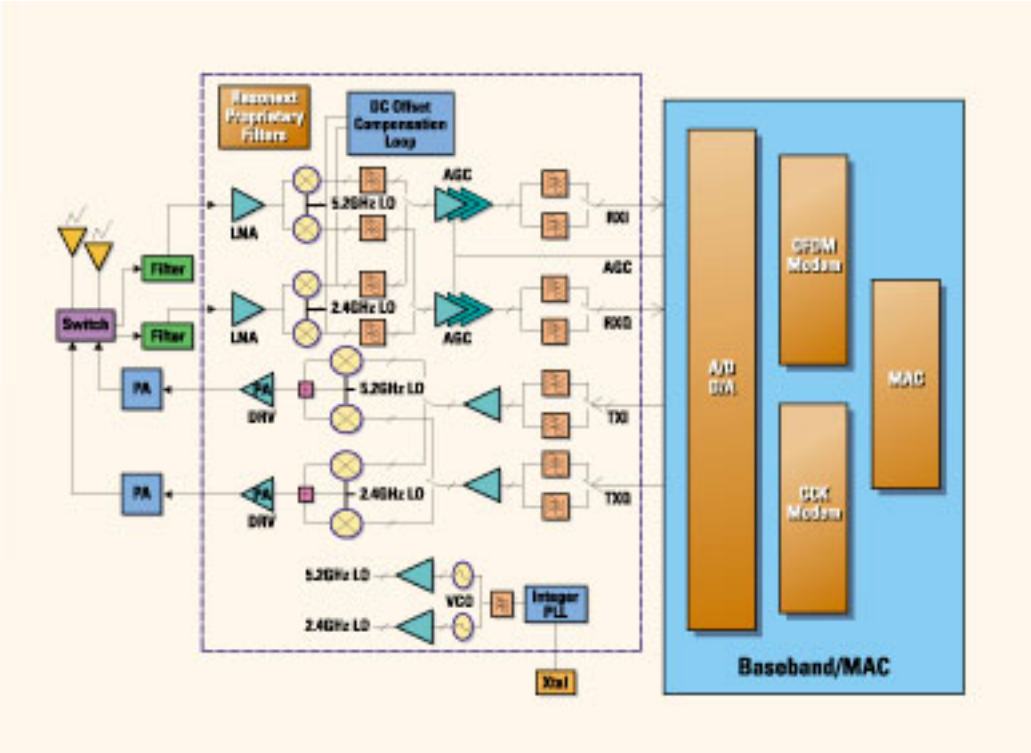

Figure 3. WISMO Quik is a GSM/GPRS module that incorporates all the essential elements of a cellular subsystem &#151 radio, baseband and digital hardware plus software &#151 needed for a complete wireless system in a single device that measures 58 &#215 32 &#215 3.9 mm.

Additional benefits can be realized by utilizing modules that are pick-and-place and surface-mount technology compatible, which make them cost-effective in high-volume production runs.

Certification

One of the biggest hurdles facing wireless product designers is the process of getting regulatory-agency and standards-body certifications (e.g., FCC, ETSI, GSM, CDMA). In addition to the regulatory and compliance testing, carriers require lab and field tests before they will allow a device to be used on their networks.

Summary

Designers need not be worried by the complexity and high resource requirements usually associated with adding wireless connectivity to a product. By carefully selecting from available module solutions rather than trying to start from scratch with a chipset, designers can eliminate the usual risks and costs, and get to market quickly with a stable, manufacturable product.

Hany Neoman is the president of Wavecom, Inc. Mr. Neoman can be reached at (858) 362-0101.

Source URL (retrieved on *04/17/2014 - 11:03am*):
http://www.wirelessdesignmag.com/product-releases/2002/09/compact-wireless-modules?qt-digital_editions=0