RadioOne Technology: An Evolutionary Leap for CDMA Phones

Zero IF topology not only eliminates IF chips and all peripheral components, but also simplifies multimode design.

By Pradeep Persaud, Qualcomm CDMA Technologies
Since the advent of cellular phones, digital baseband development has advanced tremendously, primarily because of the continual reduction in process geometry of CMOS logic ICs. The ever-shrinking die size has permitted the design of digital chips with increasing levels of integration, functionality and speed.
Meanwhile, the radio frequency (RF) sub-system embarked on a slightly different path and, because of its unique nature and physical limitations, evolved at a more restrained pace. Coexistence of ultrahigh frequency (UHF) circuit blocks on the same die with analog signals, which vary in magnitude by factors of 100 dB, created challenges for RF designers. Design efforts were further hampered by components external to the RF IC that were cost-effective only at certain frequencies of operation.

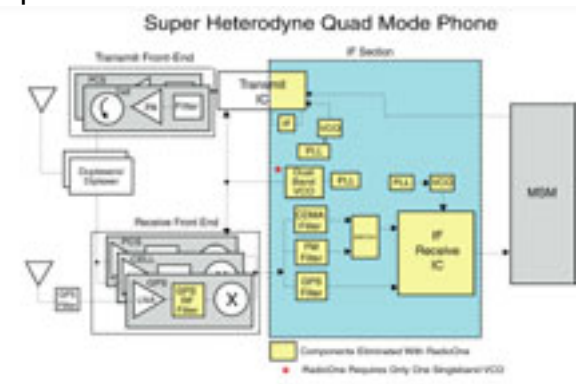

Figure 1

While the digital baseband processor's rapid evolution was due primarily to compact integration and higher speeds, RF development relied more on improvements in system architecture and complementary frequency plans. As a result, RF innovation has been somewhat incremental in nature &#151 that is, until now.
With the introduction of the radioOne&#153 chipset from QUALCOMM CDMA Technologies (QCT), the cellular phone RF section is now experiencing the greatest evolutionary leap in its history.
The radioOne chipset is a Zero IF (direct conversion) solution for CDMA phones. The chipset is comprised of three devices: a low-noise amplifier, a receive down-converter, and an up-converter transmitter. Together, these ICs provide all the RF silicon content necessary for a cellular handset (minus the power amplifier).
Because radioOne technology is based on direct conversion architecture, the RF

receive signal is directly converted to baseband while the transmit baseband signal is directly up-converted to RF. With this scheme, the entire IF transceiver unit, along with all its peripheral circuitry, is eliminated. This results in tremendous component savings over conventional designs (Figure 1).

A comparison with traditional multimode, multi-band heterodyne architecture is necessary to fully grasp the advantages of radioOne technology. A traditional quad-mode phone (Cellular CDMA, PCS CDMA, Cellular FM, and GPS) requires the following IF components: an IF CDMA SAW filter, an IF FM SAW filter, a GPS IF filter, a dual-band UHF voltage control oscillator (VCO), an external IF switch, a receive IF VCO, a dual-phase-locked loop (PLL) synthesizer, a transmit IF VCO, a transmit IF filter, electromagnetic interference (EMI) shields, a multitude of resistors, capacitors and inductors, plus the additional printed circuit board (PCB) area for all these components and the two IF integrated circuits. With radioOne technology, all of these components are eliminated.

Bill of material (BOM) parts reduction of multimode, multi-band designs based on radioOne technology extend beyond the simple removal of IF silicon, however. Phones based on the radioOne chipset require one external single-band VCO for operation in any worldwide CDMA band.

With these savings, supply-chain management and inventory control becomes easier. There is no need to stock different flavors of the same device to satisfy different regional air-interface requirements. Yield is increased and automated pick-and-place assembly cost and development time is reduced, enabling faster time-to-market.

The radioOne chipset is fabricated using a silicon germanium (SiGe) BiCMOS process, which integrates both digital and RF functions while optimizing power consumption and maximum unity gain frequency, fT. RF performance is further enhanced because the SiGe process achieves low noise and high linearity.

Overcoming Old Obstacles

In reality, zero IF is not a new concept. It has existed for almost as long as the radio itself, and was the most natural and logical choice of architecture for radio pioneers. But until recently, technical barriers, especially in receivers, prohibited practical implementation. As a consequence a more costly alternative, the heterodyne design, was developed and until now has remained the de-facto radio topology.

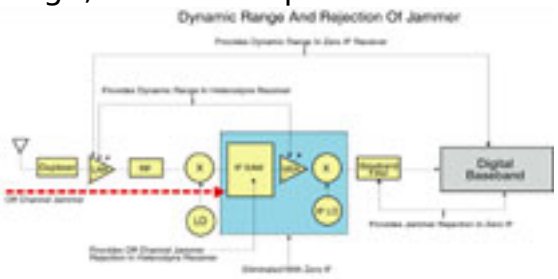

Figure 2

A direct conversion receiver's greatest strength also proved to be its greatest weakness. Many of the benefits of utilizing only one local oscillator were negated by a series of problems; specifically, issues related to input IP2, instantaneous dynamic range, signal dynamic range, DC offset and LO leakage had to be addressed before zero IF could reach mass production.

An important figure of merit for the zero IF receiver, particularly for direct down-conversion mixers, is the input second-order intercept point, input IP2. Simply put,

the input IP2 is a measure of the system's susceptibility (robustness) to second-order distortion. A higher input IP2 provides a higher level of immunity to second-order interference for the desired baseband signal.

Input IP2 determines the receiver's behavior in the presence of a very strong AM jammer relative to the receive signal. If the input IP2 is too low, an off-channel jammer will cause havoc with the receiver's operation since, because of second-order distortion, the envelope, s(t), will convolve with itself to produce an unwanted baseband signal that will smear the wanted baseband information (Figure 2). The energy of this signal is proportional to the second-order coefficient of the front-end gain, and inversely proportional to input IP2. To immunize against strong off-channel AM jammers, systems must be designed with high input IP2, which is not a trivial task.

As shown in the heterodyne receiver (Figure 3), off-channel jammers are largely rejected by the IF filter, which prevents saturation or distortion of subsequent stages. But in zero IF, the IF filter (along with the VGA amplifier and the IF mixer) is eliminated, so that any strong off-channel jammer is fed through to the baseband. The increased jammer level through the baseband signal path can potentially saturate the receiver system. With radioOne technology, however, this degradation does not occur, since the baseband has the required high off-channel jammer rejection, a lower noise floor, and tolerates higher signal levels. Together with the LNA gain control, radioOne technology ensures a high instantaneous and signal dynamic range capability for the receiver.

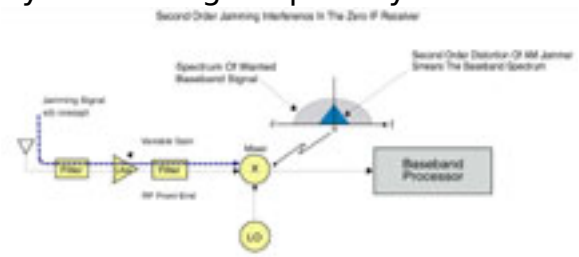

Figure 3

Historically, another problem with the zero IF receiver has been DC offset correction. When an RF signal is down-converted to baseband, ideally only the undistorted information appears at the output. However, circuit mismatch inherent to both the RF and baseband analog integrated circuits introduces a DC error, which is added to the baseband signal. The DC offset is not only affected by temperature, but can also vary with time.

Despite having many sources, DC offsets are reduced with radioOne signal processing to such an extent that only negligible traces remain. The time-varying components due to jammers and the externally reflected LO are both minimized by the radioOne high-input IP2 and its low-LO leakage, respectively.

For CDMA systems to operate efficiently, each mobile receiver chain must be capable of adjusting its gain by up to 90 dB via the automatic gain control (AGC) loop. Until now, the gain control loop has been split between RF and IF gain adjustment. But with the removal of the IF section, the problem of where to place this 90 dB of gain control range arises. Any attempts to shift the VGA task entirely to the front-end must be avoided, since it will limit the receiver signal-to-noise ratio, thereby limiting the capacity and quality of the network. The most likely solution is to perform a large portion of the AGC digitally (DAGC) in the baseband processor.

With zero IF, LO leakage and re-radiation is more severe than in the heterodyne case, since both the LO and RF receive signals are on the same frequency. Any LO reverse leakage from the mixer travels backward to the antenna from where it is radiated into the RF pass band, causing potential interference to other spectrum users. With careful RF design techniques, at both the board and chip levels, LO re-radiation is minimized to levels well below the limits stipulated by regulatory authorities.

Zero IF solutions for multimode applications are now feasible as a result of improvements in digital IC process and design methodology. The zero IF digital ASIC has the enhanced functionality of DC offset correction, DAGC, high IP2, and jammer removal. Even though many of these issues originate only in the RF subsection, current remedies involve a combination of RF and digital signal processing.

The radioOne solution is optimized so as to not overly burden any one section (i.e., RF processing is not reduced at the expense of baseband MIPs and power consumption). The right balance is struck so that overall system performance is optimized while maintaining an overall cost and parts count savings vs. more traditional receiver architectures.

Pradeep Persaud is a Product Manager with Qualcomm CDMA Technologies, in San Diego, CA. For more information please call (858) 587-1121, or e-mail CDMA-technologies

The author would like to thank Paul Peterzell, VP of Engineering, QCT and Steve Ciccarelli, Systems Engineering Manager, QCT for their valuable contributions to this article.

Editor's Note: If you would like to request copies of the images that appear in this article in an enlarged view, please email Stacy Getz at stacyg@qualcomm.com.

Source URL (retrieved on *07/30/2014 - 9:44pm*):
http://www.wirelessdesignmag.com/product-releases/2002/04/radioone-technology-evolutionary-leap-cdma-phones?qt-digital_editions=0