VSLI Lowers Costs: Chip Assembly Makes Bluetooth Solutions A Success

Chip assembly provides requirements to make Bluetooth a reality.

By Dipl.-Ing. Wilfried Blaesner
Market research institutions are predicting enormous success for Bluetooth applications. In just a few years they foresee a thousand million devices being fitted with the Bluetooth interface. For this vision to become reality, however, several requirements such as low costs, guaranteed interoperability, low power consumption and compact dimensions must first be met. The following article shows to what extent a VLSI chip assembly by Philips Semiconductors meets these requirements, and what further development stages can be expected.
Since CeBIT 2000 (Centre for Office, Information and Telecommunications (*German IT exhibition*), the name &quotBluetooth&quot has been on everybody's lips. Initially, this standard was being promoted solely by a 5-party forum, the SIG (Special Interest Group) consisting of Ericsson, IBM, Intel, Nokia and Toshiba, whereas today there are almost 2000 so-called &quotadaptors&quot, who are offering equivalent Bluetooth solutions. Its success already seems a foregone conclusion. But, what applications is this standard actually suitable for, what are the success factors, what is Bluetooth exactly and where does the name come from?

A rune stone in Jelling (Jutland) commemorates Bluetooth to this day.

Who is Bluetooth?
Harald Blaatand II was King of Denmark from A.D. 940 to 981. He achieved the almost impossible task of uniting Denmark and Norway and he has now become a symbol for unifying the worlds of mobile radio and PCs.

What is Bluetooth?

The Bluetooth interface was originally intended for one-way communication between a mobile radio device and a PC or laptop. The aim was to replace the unpopular IrDA interface. The drawback with IrDA is the infrared transmission, which produces a short range of only one metre or so, and the visual contact required. Often it only needed a small object, such as a cable, to obstruct the path and prevent any communication. Added to this, was its frequent lack options, which operate by radio, characteristically operate over a greater range and require no visual contact. Bluetooth interfaces are also &quotintelligent&quot in that they exchange data automatically when necessary, without any specific user intervention.

Radio transmission is on the 2.45 GHz ISM band (industrial, scientific, medical) which has, in the meantime, become usable worldwide, license-free, using a &quotfrequency hopping&quot process. Seventy-nine frequencies are available within this band. According to a pseudo random sample determined by a code, 1600 shifts take place every second. If one frequency is already occupied (collision), the relevant data packet is repeated on the next frequency. This frequency hopping process itself offers a relatively high degree of monitoring security, as only those stations which emit the same hopping code can build a data connection. In addition, data coding is also possible.

The usable data rate is 456 kB/s symmetrically (in each direction), 721 kB/s asymmetrically in one direction and 56 kB/z in the other. Eight interfaces or devices can be combined with a &quotPiconet&quot with one device taking over the master function. Also, communication between different Piconets is possible, which is referred to as &quotScatternet&quot. Within a Piconet three stations can transmit languages, and for this purpose specific &quotslots&quot are reserved, allowing real-time transmission. The transmitter power is generally limited to 0 dBm (1 mW), producing a typical range of 10 m. However, if required, this can be increased to 20 dBm (100 mW) to produce a range of around 100 m.

On one hand, the unlicensed 2.45 GHz band does have the advantage that various applications can be implemented with relative flexibility. However, on the other, it conceals the risk of mutual interference or even failure. Other standardised applications in this band include HomeRF and WLAN as per IEEE802.11.

The emissions of microwave ovens also fall within this band. The effect on a Bluetooth system could lie in a reduction of the usable data rate, as data packets must be more frequently repeated. However, total failure is unlikely.

An essential objective of Bluetooth is to make its applications as user-friendly as possible. Each interface has its own identification number. If the user wishes to build an &quotad hoc&quot connection, for example, from his laptop to an existing printer, he checks firstly which Bluetooth devices are in receive mode in his environment, together with their function (handheld telephone, printer, fax, etc.). The user can then select the desired device using the identification number. The user can also initialise fixed connections between, for example, a handheld telephone and a laptop and then simply forget about them, as data can be exchanged automatically if required. Simple operability and a high degree of flexibility are the main advantages of Bluetooth systems.

Applications

The first devices fitted with a Bluetooth interface, to come on to the market in large numbers, will be handheld telephones, laptops and PDAs, followed by cards or

modules for retrofitting with, for example, USB connections. This means that peripheral equipment surrounding a PC, such as printers, scanners, keyboards and mouse, can be connected or networked cable-free as for telephone and LAN/Internet access &#151 finally eliminating the need for inconvenient cables trailing from the user's desk. A huge market success is also anticipated for cordless voice accessories for handheld telephones. The user need only wear a small, lightweight ear clip and attach the telephone to a belt or jacket pocket. Voice recognition controls the device leaving the user's hands free &#151 a particular advantage when travelling by car or at work. The potentially harmful radio waves emitted from the antenna are also positioned well away from the user's head.
Bluetooth connections between a laptop and a cordless telephone means concealed data transfer, i.e. the user need take no direct action to receive an e-mail message. As soon as both devices are within radio range, they communicate automatically and immediately with each other, so that the user can put the cordless telephone in a jacket pocket and place the laptop in a briefcase. This synchronisation of data also applies to a stationary PC and a PDA or Notebook. The user need only walk into his office and the data in, for example, the calendar is already updated.
Up to now, only static connections and networks have been described. An important advantage of a Bluetooth interface is that it can be used for &quotad hoc&quot connections, which are only short term and are easy to initialise. During a presentation, for example, a laptop can communicate with a Beamer or files can be exchanged during a conference.
One day, Bluetooth interfaces will also become established in such areas as domestic automation, consumer electronics, E-commerce, industrial control systems, automotive applications, surveillance and security access control.

Success Factors

However, there are a number of technical and commercial prerequisites to be met before such widespread use is feasible. These essential success factors include:
&#149simple operation
&#149low costs
&#149interoperability
&#149small dimensions
&#149low power consumption

The Bluetooth specification itself already inherently fulfills the first criterion of simple operation. And a semiconductor manufacturer with a chip assembly design can make a significant contribution to meeting the remaining criteria.
In terms of costs, system, development and production costs all have to be taken into account. The system costs depend essentially on the integrated circuits (chip assembly) and the number and type of external components. In this respect, VLSI (e.g., memory and filter) and modern processes with small structures and large wafer diameters are crucial. Additionally, mass production with a high number of units must be undertaken as an improvement in efficiency and a reduction in test time can then be made, and chip housings can also be produced more economically. Similarly, optimising the software leads to a reduction in costs so that smaller memories can be used. As regards system development, the availability of evaluation kits, reference designs and software packages is of key importance. For medium and small numbers of units, in-house development is too costly and the use of finished modules is recommended. In production, short throughput times should

be aimed for, with no adjustments necessary to the solution, and the number of components limited to a minimum.
On the one hand, interoperability is a question of hardware and, on the other, it requires appropriate software design and extensive field tests. The development of a chip assembly is, therefore, only possible in close partnership with an equipment manufacturer.
To achieve the smallest possible size, such as those dimensions required for voice accessories or for use in a cordless telephone, both chip VLSI and small housings are necessary. LTCC (low temperature cofired ceramics) technology offers advantages in terms of the radio component as capacitors and resistors can be integrated very compactly.
The longest possible battery life or longest possible operation with storage batteries is desirable for all portable devices. Low current processes (CMOS/ BiCMOS), chip design and optimised power management (software and hardware) can all play a part.

Partnership

Philips Semiconductors and Ericsson have formed a partnership to promote a rapid and wide-ranging market launch of Bluetooth devices by collaborating in the development of a Bluetooth chip assembly. Philips Semiconductors is contributing its ASIC platform to this partnership &#151 its CMOS and QuBIC process technology, and its long experience in mass production of DECT chip assemblies (DECT and Bluetooth systems are comparable with regard to the requirements for the radio component and baseband handling). As an equipment manufacturer and SIG co-founder, Ericsson is making its contribution to interoperability in the form of its &quotGolden Bluetooth Core&quot together with software and field tests.

From ASIC to VLSI Chip Assembly

The development of a Bluetooth baseband processor with an ARM core began in 1999. The result is the VWS26002 suitable for point-to-point connections. Its HF interface was designed for connection to an Ericsson radio module. This module continues to be installed in conventional Superhet technology and is therefore relatively costly.
The first generation chip assembly has been in mass production since mid-2000 and consists of the VWS26002 and HF transceiver UAA3558. This chip is a derivative of the DECT family and, thanks to LIF (low intermediate frequency) technology, is both cost-effective and offers VLSI. The ASIC VW26100 interface is required for its control as the interface of the UAA3558 has already been designed for the second generation baseband controller. For point-to-multipoint connections the VWS26003 is available. Codec and SRAM are still connected externally for this solution.
The fully integrated baseband controller PCD87750, &quotBlueberry&quot, is available as a genuine two-chip solution. Samples are already available and an evaluation kit incorporates a baseband and radio components. Mass production is planned for the beginning of 2001.

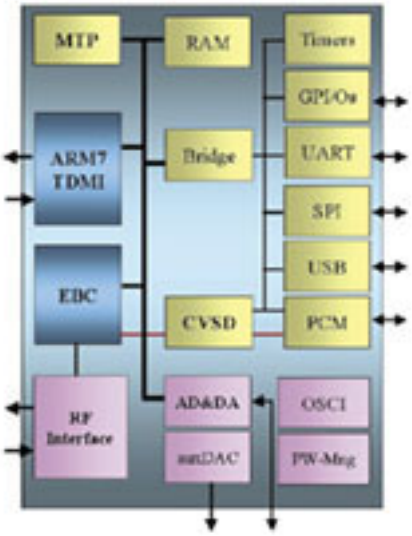

Figure 1. Block diagram of PCD87750 &quotBlueberry&quot.

Baseband Controller
Figure 1 shows a block diagram of PCD87750. It contains a powerful 32bit processor ARM7/TDMI, the Ericsson Bluetooth Core (EBC), a 384KB MTP memory (multi time programmable) together with an SRAM available as 64KB for use with Ericsson software, or as 32KB for code-optimised Philips software. To allow for the widest possible range of applications, several interfaces have been integrated: SPI, PCM, USB, a UART and 21 GPIOs, together with the A/D and D/A converter for voice transmission. The chip is designed for a 0.25 &#956 m CMOS process with a supply voltage of 2.7 V and is supplied in a space-saving LFBGA81 housing measuring 9 3 9 mm.

Radio
The HF transceiver UAA3558 incorporates all the functions in transmission and receive paths, including VCO and synthesizer. Thanks to its LIF architecture, all the filters can be integrated and no additional SAW or ceramic filters are required. Externally, less than forty non-critical components, essentially single capacitors and resistors, are required. This equates to around half the number of components required for conventional Superhet solutions. The input sensitivity is &#150 90 dBm and consequently is 20 dB better than the level required in the Bluetooth specification, thereby leading to larger ranges. The baseband controller is controlled by a fast, serial three-wire bus. The HF output is 4 dBm so that a transmitter power of 0 dBm is guaranteed, taking into account the losses to the antenna. If required, an additional transmitter amplifier can be connected. The circuit is designed for a BiCMOS process &quotQUBIC 3&quot with structures of 0.5 mm and a cut-off frequency of 60 GHz. It may be supplied in a LQFP32 or a VQFN32 housing as desired. Both housings measure 5 &#215 5 mm. As the most important system parameters are already recorded and tested in the specification for the UAA3558, the design using this IC proves to be comparatively simple and no adjustment is required in production. Figure 2 shows an experimental board of the transceiver together with a transmitter amplifier.

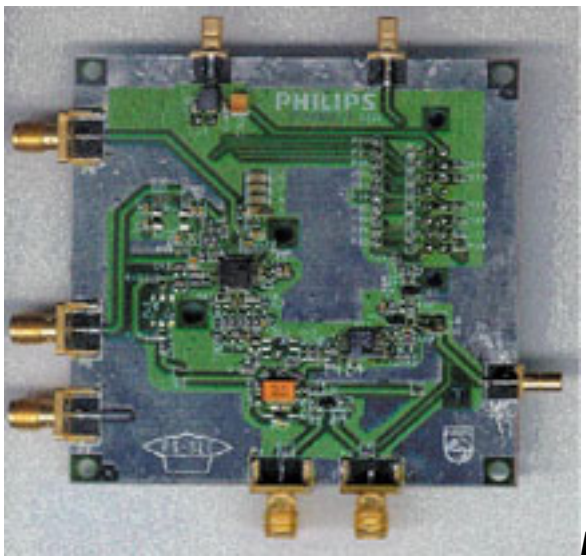

Figure 2. Experimental board of UAA3558.

To make the HF design even simpler a complete radio module is offered. This is obtainable under the name BGB100 &quotTrueBlue&quot and is characteristically extremely small (12 &#215 12 &#215 2 mm). The module contains UAA3558 and the entire periphery on a LTCC substrate. No additional external components are required, and the antenna and baseband controller can be directly connected. The output is 0 dBm at the 50 Ω antenna contact. A metallic EMC shield is also included. To increase the range of a Bluetooth system from 10 m to approximately 100 m, the transmitter power can be increased to 20 dBm. For this purpose two transmitter amplifiers are available. The UAA3591 has an efficiency rate of 45% and therefore has a particularly low-current drain. Its output is 24 dBm, which guarantees a value of 20 dBm at the antenna. The amplifier is contained in a MLF16 housing, measuring 4 &#215 4 mm. For a simple and very cost-effective solution the BGA2450 is available. This delivers an output of 20 dBm, has an efficiency rate of 30% and is contained in a SOT457 housing measuring 3 &#215 3 mm.

Software

Bluetooth software for the chip assembly is modular in structure (Figure 3). Philips Semiconductors supply the bottom layers to the HCI (host controller interface), which includes both the Ericsson software and its own code-optimised version. Tailor-made application software is obtainable from SW partners such as S3, Inventel, Widcomm and AVE.

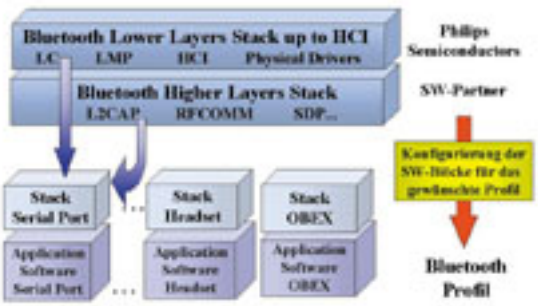

Figure 3 Modular Software Structure.

Future Prospects and Price Trend

Even greater market distribution of Bluetooth interfaces will require a further reduction in costs. This can be achieved with a single chip solution, which means

that the radio component must be integrated into RFCMOS technology. With process structures of 0.18 &#956 m this objective is commercially feasible, however mutual interference between the HF and baseband signals on the chip must be expected. As the solution to this problem will, presumably, require several layout cycles, a multi-chip module (HF and baseband chip in a common housing) could offer a temporary solution. In 2003 with the development of the single chip solution, the price tag of US$5 is likely to drop.

Wilfried Blaesner is Business Development Manager Europe for mobile communication at Philips Semiconductor, Marketing and Sales, Hamburg.

Source URL (retrieved on *03/11/2014 - 1:15am*):
http://www.wirelessdesignmag.com/product-releases/2001/04/vsli-lowers-costs-chip-assembly-makes-bluetooth-solutions-success?qt-most_popular=0