Test Methodologies for Evaluating Broadband W-CDMA Receiver Designs

3GPP has defined a new suite of tests to evaluate W-CDMA.

By Cliff Bailey, Spirent Communications
Wireless broadband technologies continue to advance and mature at a remarkable rate. Wideband Code Division Multiple Access (W-CDMA) mobile radio networks promise higher data throughput, increased capacity, and seamless worldwide roaming on wireless networks. W-CDMA systems will employ sophisticated wideband receiver architecture that will enable a new level of transmission performance over the radio channel. The Third Generation Partnership Project (3GPP) is currently driving the W-CDMA standards process for these new wireless systems. The participating standards organizations and governing bodies include ARIB, CWTS, ETSI, T1, TTA and TTC.
The features and requirements of W-CDMA are intended to be consistent with the IMT-2000 vision defined by the International Telecommunications Union (ITU) for a global communications network. ITU refers to this 3G network as International Mobile Telecommunications-2000 (IMT-2000) while the network is known throughout Europe as the Universal Mobile Telecommunications System (UMTS).
dedicated pilot.

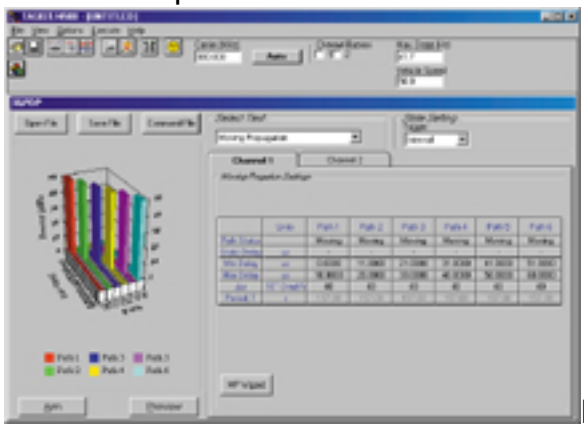

Figure 1. The user interface for the TASKIT/4500 3GPDP application.

W-CDMA's air interface and receiver structure vary dramatically from 2G implementations. Thus, 3GPP has defined a new suite of tests to evaluate the receiver performance of W-CDMA handsets and infrastructure equipment. These new test requirements are similar in some respect to those successfully employed in the IS-95 CDMA arena.
With a deployable W-CDMA system still under development, the standardization process is proceeding at a very rapid rate. The current W-CDMA schedule included a December 2000 released specification that will lead to planned initial deployments

by mid-2001.

W-CDMA Receiver Technology

New receiver test methodologies are based on the main components of the W-CDMA receiver. The receiver can be broken down into two modules that include the RF front end and the baseband signal processor. While these two pieces do not operate independently, they do individually define the capabilities of the overall receiver.

A typical super-heterodyne receiver architecture is presented in Figure 1. This represents the RF front end of the receiver that converts the received RF input from the antenna to **I**n-phase and **Q**uadrature (I/Q) signals that are passed on to the baseband signal processor. As the figure shows, the signal conversion is a two-stage process. The first step converts the RF carrier into an **I**ntermediate **F**requency (IF) through a chain of RF/IF filters and a **L**ow **N**oise **A**mplifier (LNA) all aimed at providing a relatively clean IF output. The IF output is then amplified and split into baseband I and Q signals by the second part of the downconverter. These filtering, amplification and conversion functions are the target of the RF related tests.

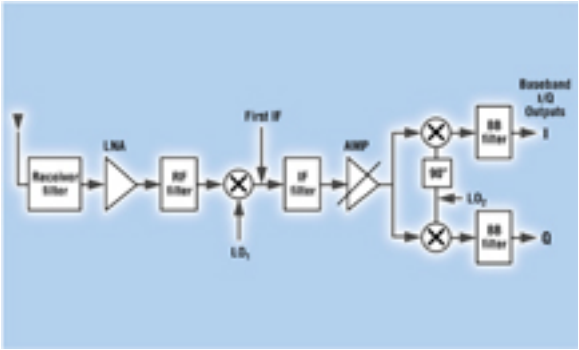

Figure 2. A typical super-heterodyne receiver architecture.

While Figure 2 shows the more traditional RF receiver architecture, advances in data conversion and high-speed signal processing are moving toward a new receiver architecture. This new direct down-conversion approach mixes the receiver RF input directly to I/Q baseband components with no intermediate stage. This new approach results in a reduced component count and less expensive low frequency filtering and amplification implementations.

Figure 3 illustrates the basic components of the baseband receiver module. While the exact sequence of operations and naming conventions may vary based on implementation, this figure shows the key elements of the signal-processing path. The I/Q baseband outputs of the RF Front End are fed into the baseband module where both the I and Q signals are processed in parallel. First, they pass through an **A/D** Converter and **L**ow **P**ass **F**ilter (LPF) to permit the use of **D**igital **S**ignal **P**rocessing (DSP) techniques. This digital block is explained in terms of four main functions including signal despreading and channel estimation, maximal multipath combination, deinterleaving, and decoding.

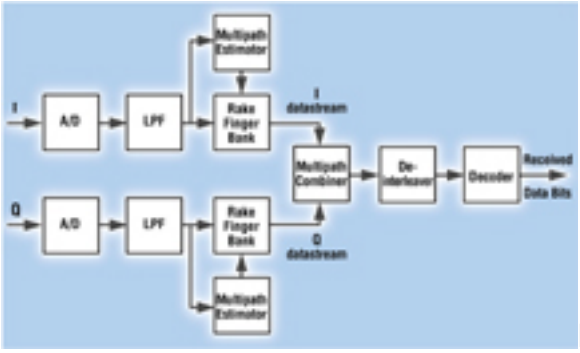

Figure 3. The basic components of the baseband receiver module.

The despreading and channel estimation functions are part of the Rake receiver implementation. The Rake receiver turns the time-dispersive nature of the radio channel into an asset rather than a liability by taking advantage of the properties of the spread spectrum W-CDMA signal to combat multipath propagation conditions. Rake receivers have multiple fingers (or correlators) that attempt to lock onto the time-shifted copies of the transmitted signal generated by multipath propagation. Each finger is then despread to turn the received wideband chips into narrowband symbols. The **M**ultipath **E**stimator performs a continuous search for the strongest components and allows the **R**ake **F**inger **B**ank to adapt to location changes along the delay-spread axis. The **M**ultipath **C**ombiner then combines the three or four strongest replicas of the transmitted signal to improve receive signal quality and protect against signal fades.
The **D**einterleaver and **D**ecoder remove the error correction additions that were made by the receiver to recover any lost data. The combined results of these complex building blocks provide the structure for W-CDMA signal reception. A tremendous amount of R&D effort is focused on obtaining maximum results from each receiver function in an effort to hit the capacity and high-speed transmission goals of IMT-2000.

Mobile & Infrastructure Receiver Test Methodology

Typical 3G development strategy divides the UE (User Equipment) receiver into two basic elements. These are the Baseband modem that handles the demodulation function and the RF front end that handles antenna reception and RF downconversion. Verification of these individual pieces has often been restricted to software simulation and custom prototypes. Previously, most of the hardware interaction and performance verification was completed at a system level after the design of both modules had reached a stage that supported combined verification. The parallel designs of the Baseband modem function and the RF front end require new attention to actual hardware performance. Parallel design and verification attempt to shorten the system integration time by working through development issues that would have previously received little attention until system level testing began. With this new test methodology in place, the current W-CDMA Terminal Conformance specification provides a more effective evaluation of the two sub-modules of the receiver.

Baseband Performance Testing

The Baseband modem offers the signal processing capability that addresses two key areas of receiver performance. Overcoming the transmission impairments caused by a multi-path faded channel is a key factor in establishing the level of performance. Tolerating co-channel interference impacts the capacity limitation in

the CDMA air transmission scheme. Many of the R&D efforts for 3G technologies have focused on improving this tolerance.

Multipath Propagation Conditions
Fading models are used to test the capability of the entire demodulation function. These performance tests are run under propagation conditions that fall into two main categories; static multipath conditions that are common to Second Generation wireless applications, and newly added Dynamic Channel models that attempt to stress the key elements of the W-CDMA receiver. When characterizing these channel models, the term **P**ower **D**elay **P**rofile (PDP) is often used to refer to the instantaneous impulse response of the propagation channel. It provides a time snap shot of the delayed arrivals of the transmitted signal plotted against the relative power of each arrival. Figure 4 shows the PDP at three separate time instances. The time-dispersed replicas of the original transmission are referred to as paths, taps, or fingers.

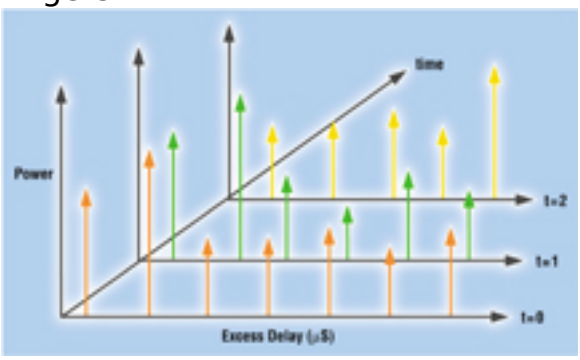

Figure 4. Power Delay Profile (PDP) provides a time snap shot of the delayed arrivals of the transmitted signal plotted against the relative power of each arrival.

The static channel models present PDPs with between one and four separate delay taps. For outdoor propagation environments, a total delay spread of tens of microseconds is provided with the selected tap spacing. The Classic Rayleigh spectrum is used to introduce independent multipath fading on each tap. The net result is a PDP that has fixed delay spread and path attenuation settings for the duration of the demodulation tests.
Dynamic channel models present new challenges to the minimum performance criteria of the receiver modem. The main reason for adding this new suite of dynamic tests is to thoroughly exercise the searching and tracking capability of the Rake receiver and to verify minimum demodulation performance in the presence of these varying propagation conditions. A basic PDP with two equal power taps provides the starting point for the two variants of the dynamic channel model required in the W-CDMA terminal conformance specification.
The Moving Propagation condition utilizes one static tap and one moving tap to provide a sinusoidal variation in the path delay separation. The current specification calls for a variation range of 1 to 6 &#956 sec with a 157 second period (40E-3 radians/sec).
The Birth-Death condition provides two moving taps that modify their position on the delay axis every 191 ms. Only one tap is permitted to move at a time. The two taps sequentially vary within a &#177 5 &#956 sec window with a delay bin resolution of 1 &#956 sec. This results in a repeating series of the &quotDeath&quot or disappearance of one path at its original delay location

followed by the &quotBirth&quot of the same path at a new delay location.

Co-channel Interference
With the use of a Code Division Multiple Access air interface technology, co-channel interference is an expected element in the operating environment. The ability to tolerate this interference on the same frequency channel defines the soft capacity limitations of the system.
Testing these limits in conjunction with the development of the Baseband signal-processing module will assure that an acceptable quality of service and capacity can be obtained. This begins with software simulation models and continues with hardware verification. The demodulation tests combine the multipath fading effects with a required Signal to Noise ratio (I_{or} / I_{oc}). The use of AWGN noise and CW interference models permit co-channel verification early in the development cycle of the Baseband module.

RF Performance Testing
With the multipath fading and co-channel interference handled by the Baseband modem, it is easy to isolate the RF related impairments that result from the transmission and reception of the W-CDMA signal. These RF measurements fit in to three categories; the evaluation of the max/min power handling of the receiver, the ability to tolerate undesired out of channel interference, and the intermodulation and harmonic distortion characteristics of the RF front end.

Reference Sensitivity Level and Maximum Input Level
Increased performance requirements have been placed on the receiver to assure that it can operate effectively with a minimum level of received power at the handset. This level is set largely by the obtainable noise figure of the RF front end. The Reference Sensitivity Level procedure identifies the minimum receiver input power measured at the UE antenna port at which an acceptable **B**it **E**rror **R**ate (BER) must be maintained. Poor reception sensitivity would result in a decreased coverage area in the vicinity of each base station. Similarly, the Maximum Input Level procedure ensures an acceptable level of performance when the received power of the UE approaches the defined maximum level.

Adjacent Channel Selectivity
The **A**djacent **C**hannel **S**electivity (ACS) test procedure is a measure of the receiver's ability to distinguish the desired W-CDMA signal at an assigned channel frequency from an adjacent channel signal offset by &#177 5 MHz from the center of the assigned channel. The ACS represents the ratio of the passband filter attenuation on the assigned channel to the stopband filter attenuation encountered on the adjacent channel. The adjacent channel interferer is a W-CDMA modulated carrier in this case. The lack of appropriate Adjacent Channel Selectivity could result in a decreased coverage area if the UE is unable to suppress interference in the adjoining channel.

Blocking Characteristics, Spurious Response, and Intermodulation
These three test procedures evaluate the ability to provide acceptable performance in the presence of unwanted interferers other than the specific ACS requirements. The Blocking test utilizes modulated interferers located at other valid frequencies within the transmit/receive bands. The Spurious response test looks at the

wideband effects of a CW signal located anywhere from 1 MHz to 12.5 GHz. This procedure is typically directed at known response frequencies that result from a specific implementation of the receiver. The intermodulation test looks at a combination of modulated and CW interferers that have specific frequency relationships to the assigned channel in order to evaluate the harmonic distortion capabilities of the RF interface components.

W-CDMA Receiver Test Bed

New test requirements for receiver evaluation must be addressed as the W-CDMA standardization process evolves. This is particularly true in the RF channel emulation area where several new demands are being placed on the test equipment. New requirements include frequency coverage of the IMT-2000 bands, support for emulation bandwidths of 5 - 20 MHz, and increased delay resolution to accommodate the Rake finger tracking algorithm.

New requirements have also been placed on multipath propagation models used for demodulator testing. In addition to the legacy four-path static models used for conformance testing of 2G technologies, new dynamic channel models have been added to address Rake receiver search and tracking mechanisms.

As a result of these new demands, Spirent Communications has built on its experience with 2G channel emulation solutions to provide capabilities that meet and exceed the channel emulation requirements in the conformance test specification. Spirent's 3GPDP application for the TAS4500 FLEX5 RF Channel Emulator specifically addresses the dynamic channel modeling aspect. Figure 1 presents the user interface for the TASKIT/4500 3GPDP application that is currently being used in the industry to emulate dynamic channel conditions. The graphical interface works well for stand alone test applications, and simple remote command access allows for easy integration into automatic test environments.

As the pressure for system delivery increases, the desire for complete W-CDMA test capability continues to grow. With these new test methodologies established by the evolving 3GPP standard, the timely availability and performance of the test equipment solutions will be extremely important to on-time system deployment.

References

1. Third Generation Partnership Project (3GPP), &quotRadio Transmission and Reception (FDD),&quot Terminal Conformance Specification 34.121, Version 1.5.0, December 1999.
2. T. Ojanpera, R.Prasad, *Wideband CMDA For Third Generation Mobile Communications*, Artech House Publishers, 1998.
3. T. Ojanpera, R.Prasad, &quotAn Overview of CDMA Evolution Toward Wideband CDMA,&quot IEEE Communications Survey, 1998.

Cliff Bailey is the project manager of Wireless Test Systems for Spirent Communications of Eatontown, located in Eatontown, NJ. Please visit the company's website at www.spirentcom.com

Source URL (retrieved on *12/21/2014 - 10:35pm*):
http://www.wirelessdesignmag.com/product-releases/2001/04/test-methodologies-evaluating-broadband-w-cdma-receiver-designs?qt-most_popular=0