ON Semiconductor

Wireless Systems Extend Battery Life by Utilizing ON's New Operational Amplifiers

There have been some incremental improvements in the supply voltages for op amps and products on the market have moved from a minimum of 3.0 volts to 2.5 volts, and even down to 1.8 volts. Until now, there have been no significant improvements in supply voltage. Designed using ON Semiconductor's SMARTMOS&#153 technology these op amps are the world's first and only that can be powered from a single NiCd, NiMH, or alkaline battery cell. They are unique in their ability to provide such low rail-to-rail performance on both the input and output. They operate at 0.9 volts and have guaranteed specifications at 1 volt. This is the lowest supply voltage operation of any part on the market.
There are two main reasons the low voltage specifications of this series are important to designers. The first relates to battery life. If a system uses components that are not capable of operating below 2.5 volts then the PDA or cell phone, for example, no longer operate when the battery voltage falls below 2.5 volts and the user knows his battery is dead. But is it really? What if you had a system with components that operated down to 0.9 V? Now the battery voltage hits 2.5 volts and keeps working &#151 all the way down to 0.9 volts. In effect, by using 0.9 volt devices in the system, we have longer operating times for the portable device. Alternatively, if the run time at 2.5 volts is acceptable, the system designer may choose to use 0.9 volt devices and use a smaller battery, thereby keeping the operating time the same but making the end product smaller and perhaps saving on battery costs. The 0.9 volt threshold is also significant because it is the voltage where a single nickel-cadmium (NiCd) or disposable battery is considered fully discharged. Using the MC33501 or MC33503 allows the circuit to consume the entire battery life.

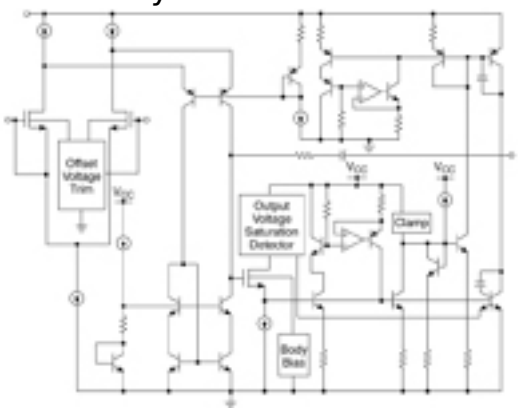

Figure 1 Block Diagram of Single Op Amps MC33501 and MC33503

The second major benefit of this series is that there are now 0.9 volt core voltages in DSPs and microprocessors whereas the bulk of the market is at 3.3 V it was not so long ago that 5.0 volts were typical. This trend was referred to earlier in the

portable market. All surrounding components must then support these main chipsets, such as a DSP, at whatever voltage they use. These devices must interface with signals at 0.9 volts so the amplifiers must also work in this range. When system voltages are this low, rail-to-rail operation is a requirement the MC33501 and MC33503 meet effectively. Rail-to-rail operation means that the output voltage signal swings such that it almost touches the positive and negative supply voltages. In low voltage systems, it is important to use as much of the voltage range as possible thereby maximizing the signal integrity and improving the signal-to-noise ratio. There is no need for additional power regulators to generate higher supply voltages when using these op amps because they operate on a single supply voltage.

There are two versions of this amplifier available and both are packaged in the micro-miniature surface mount TSOP-5. The difference between the two versions is that the location of the supply voltage pin, Vcc, and the ground pin, Vee, are interchanged. On the MC33501, pin 2 is Vcc and pin 5 is Vee. On the MC33503 pin 2 is Vee and pin 5 is Vcc. These two options match the common pin-out styles currently seen on the market in the TSOP-5 package. Offering the two options maximizes the flexibility for designers to drop these op amps into and upgrade existing applications. The TSOP-5, otherwise known as SOT23-5 package enables high-density circuit board designs due to its very small form factor and has become the industry standard package for single low voltage amplifiers.

A dual version of this op amp is available in the MC33502DR2

The bandwidth is high enough to make these amplifiers suitable for a wide variety of applications. With a typical unity gain bandwidth of 5.0 MHz (at 5.0 volt supply), the amplifier consumes only 1.65 milliamps, making the MC33501 and MC33503 very competitive in the tradeoff between the drain current and the amplifier speed. Additionally these devices provide an &quoton demand&quot base current cancellation amplifier. This feature provides base drive to the output power devices, by making use of a buffer amplifier to perform a voltage-to-current conversion. This is done in direct proportion to the load conditions. This feature allows these amplifiers to consume only a few microamps of current when the output stage is in its quiescent mode.

The MC33501 and MC33503 provide output current of up to 50 mA when required and the output is capable of driving 600 ohms on transmission line. These op amps also have impressive noise performance of 30 nV/rtHz (at 1 kHz) which is especially important in the design of communication products that are sensitive to any noise injected into the system. The input offset voltage is trimmed to 0.5 millivolts typical. It is difficult to find an op amp better able to appropriately balance the tradeoffs of critical electrical characteristics and still produce a versatile device. When such a device is also optimized for low voltage operation and put in a miniature package, it

is truly one of a kind.

ON Semiconductor
5005 E. McDowell Road
Phoenix, AZ 85008
Tel: (602) 244-6600
Fax: (602) 244-3345
www.onsemi.com

Source URL (retrieved on *12/28/2014 - 9:59am*):
http://www.wirelessdesignmag.com/product-releases/2001/04/semiconductor