The Basics of Designing a Multi-Device Test System

Robin Irwin, Aeroflex Limited

In this blog I'd like to explain a typical multi-device production test scenario for engineers who want to increase efficiency of test equipment.

Multi-device Design Considerations

Multi-device testing is about looking at RF conditioning and looking to improve test system efficiency for a number of devices. There are a number of multi-device testing options that can be identified:

1. Multiple RF channels.
2. Multiplexing RF Resources.
3. Sharing RF Resources.
4. Any combination of the above.

Option 1: Multiple RF Channels

This is where a RF channel is mapped 1-to-1 to a specific device, testing each device asynchronously (DUTs are not required to be tested/controlled at the same time). The setup is shown below:

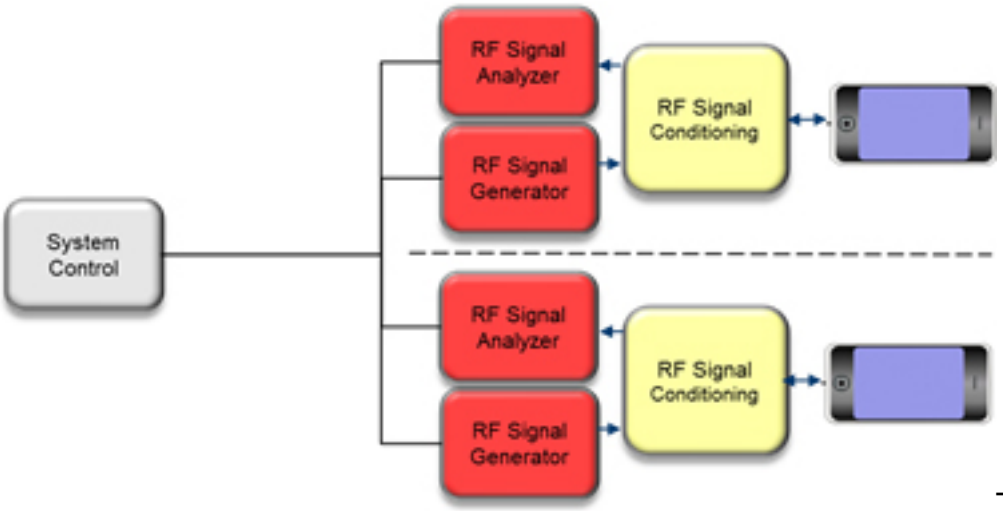

This approach can be best explored with modular test equipment (such as PXI-based systems) where additional channels can be added as required, and where the RF signal conditioning can also be specific to the device requirement. A traditional one-box-test approach can work but it is likely to be less flexible. For example, the one-box approach may not provide a range of RF signal conditioning options. That function in the system moves external to the test equipment, such as fixturing requirements. The diagram above shows each channel having a common controller but this could also be a

dedicated controller per channel. When moving from 1 RF channel to n RF channels, some careful design is required to avoid interference. It is also necessary to think about how to identify a given device in the test flow within the test executive now the channel count has increased per test station.

Option 2: Multiplexing RF Resources

This is where RF resources are multiplexed sequentially between different DUTs. The first example allows for full duplex multiplexing where a device is tested sequentially. This suits a FDMA setup where transmitter and receiver can be tested in parallel:

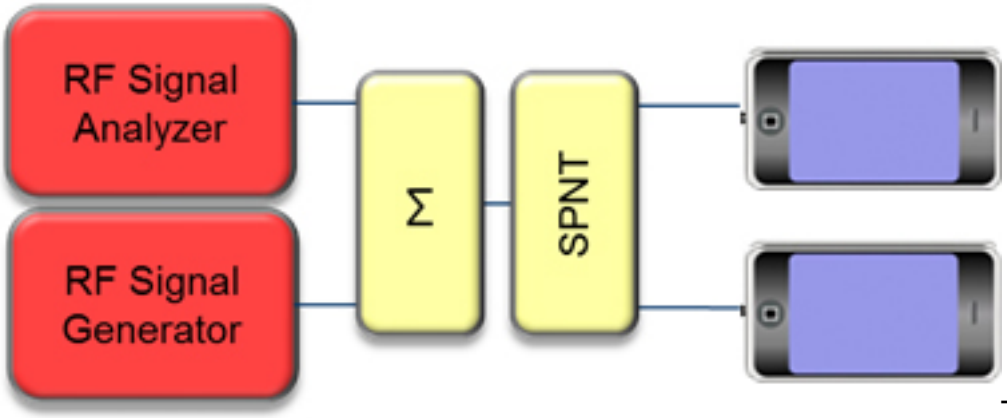

The following example shows that a receiver on a given device can be tested while the other device transmitter is tested. This is sometimes referred to as Tx/Rx ping-pong testing. In this scenario each device can use an independent RF resource. This is an example of half duplex testing suited for a TDD/TDMA setup:

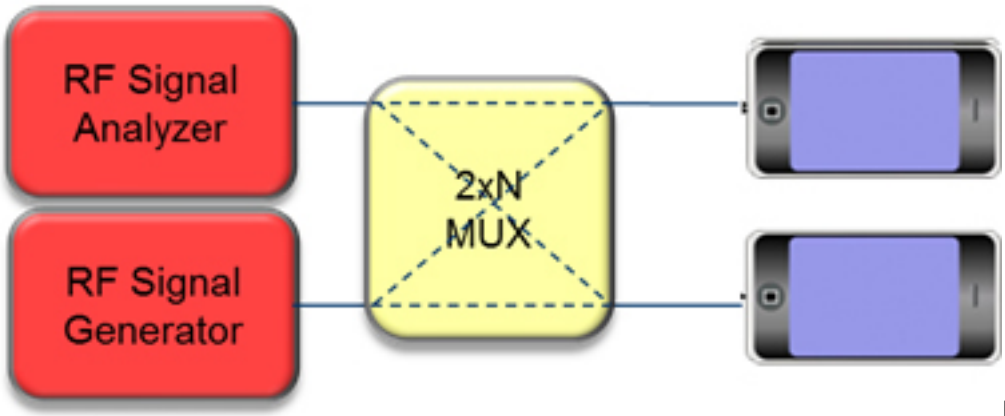

In each case the cost of test can be lowered, a single PC controller used and device booting or handling time reduced.

Option 3: Sharing RF Resources

This option has RF resources shared simultaneously between multiple DUTs:

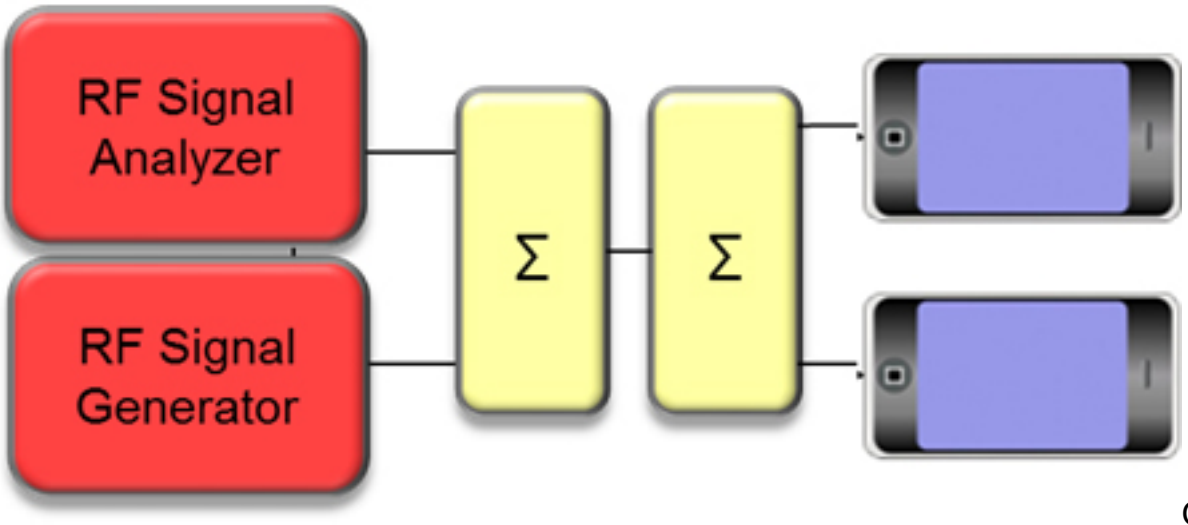

Option 4: Combinations – Multiplexing & Sharing RF Resources

The last scenario is a combination of the previous techniques inside the RF conditioning. This provides the ability for multiplexed and shared resources.

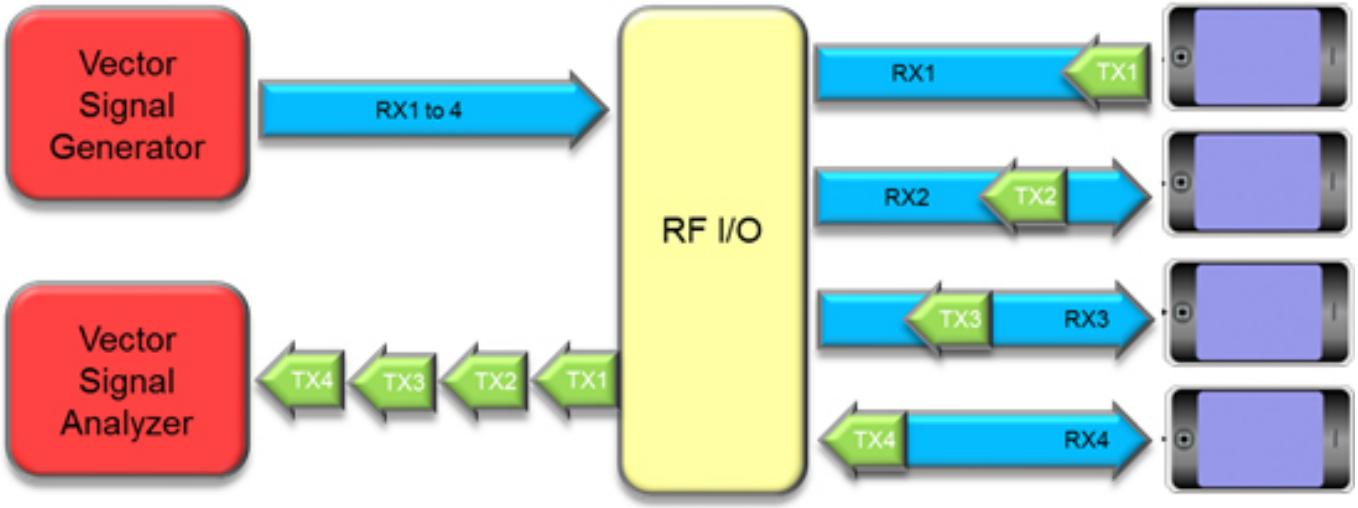

It illustrates a high utilization of RF resources with a broadcast downlink (allowing for parallel receiver testing) and switched uplink (for sequential transmitter testing).

The examples above present synchronous (all DUTS tested/controlled together at the same time) and asynchronous (DUTs tested/controlled separately) approaches. Whichever way multi-DUT is used to improve test utilization, it is important to ensure the chosen technique fits in with fixturing and handling equipment so as to minimize or eliminate the handling time in a production line flow.

Source URL (retrieved on *04/17/2014 - 7:39am*):
http://www.wirelessdesignmag.com/blogs/2013/10/basics-designing-multi-device-test-system