Who’s Managing Your Power Management?

Bob Frostholm, JVD Inc.

Today’s complex systems employ a wide variety of semiconductor technologies. From the deepest sub nanometer processors to the Analog I/O, it’s easy to see the need for power management devices for 1.0, 1.2, 1.5, 1.8, 2.2, 2.5, 2.8, 3.0, 3.3 V and more, all in the same box.

Dozens of companies offer thousands of chips to address these needs. Data sheets, PDKs and application notes make implementation easier than ever. If your volume is high enough, chip company application engineers are more than willing to do the design work for you. Sit back, watch You Tube, follow friends on Facebook and wait for the circuit to arrive by email. It’s not quite that simple, but let’s be honest, there are a lot of free resources out there to assist.

A few dozen years ago, engineers fresh out of school were assigned to the power supply team; the most boring and least challenging aspect of the system and the one most forgiving of inexperience. Could it come to that again?

Not likely. But you really should ask yourself, who is really managing your power management. Is it you or your suppliers? Who really understands your power management needs and more importantly, the solution you’ve implemented? Is your 7Amp 1.2V solution overkill for your 2.9Amp requirement? Could a lower cost LDO be used instead of that switcher?

“Gee, thanks Mr. Semiconductor Company Applications Engineer for designing most of my system with all your high margin chips. It sure plays nice in my application.”

Power Management is more than developing solutions that run cool and conserve power. It’s also about managing cost. With today’s plethora of fifteen and twenty cent chips, it’s easy to assume your design is financially viable. But is it?

Financial management is inextricably intertwined with power management. Often power management solutions transcend multiple product generations. It’s the most logical place to drive cost out of a system for greater long term savings. Yet, for some reason, it’s also the most overlooked.

The following figure represents the power board for a typical consumer application:

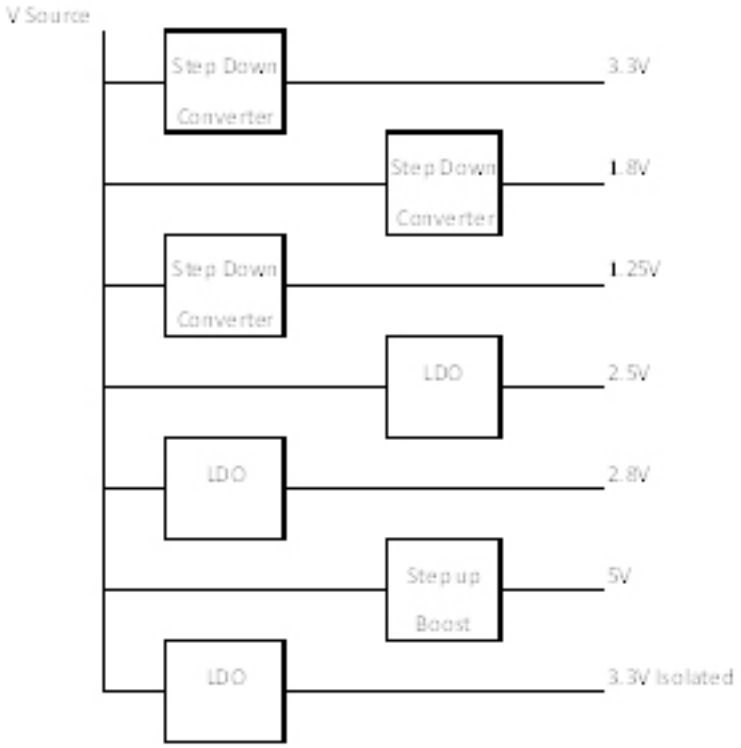

Depending on total volume, the Bill of Materials may range from $1.00-$1.50 at the low end, to perhaps as high as $2.00.

However, integrating these seven chips into what is called and iASIC, or integrated ASIC, would yield a much lower cost single chip solution while retaining all the desired power saving functionality of the original designs. An iASIC (a chip integrating existing functions without the need to create new IP) is easy to accomplish and has a short Development time.

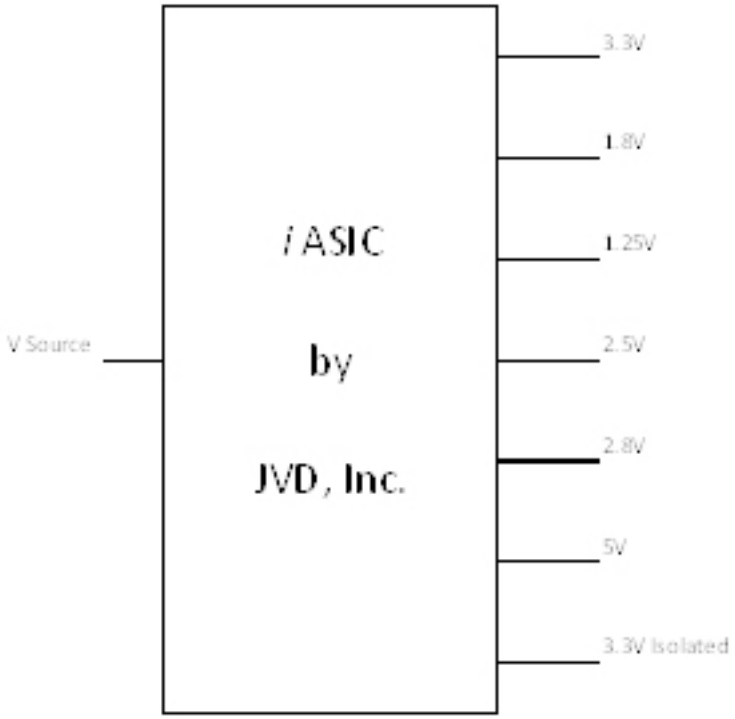

The cost of the iASIC for the above set of requirements would be in the neighborhood of $0.60 each,

Another example can be described using an industrial power supply application. The original design uses five controllers and ten Power MOSFETs.

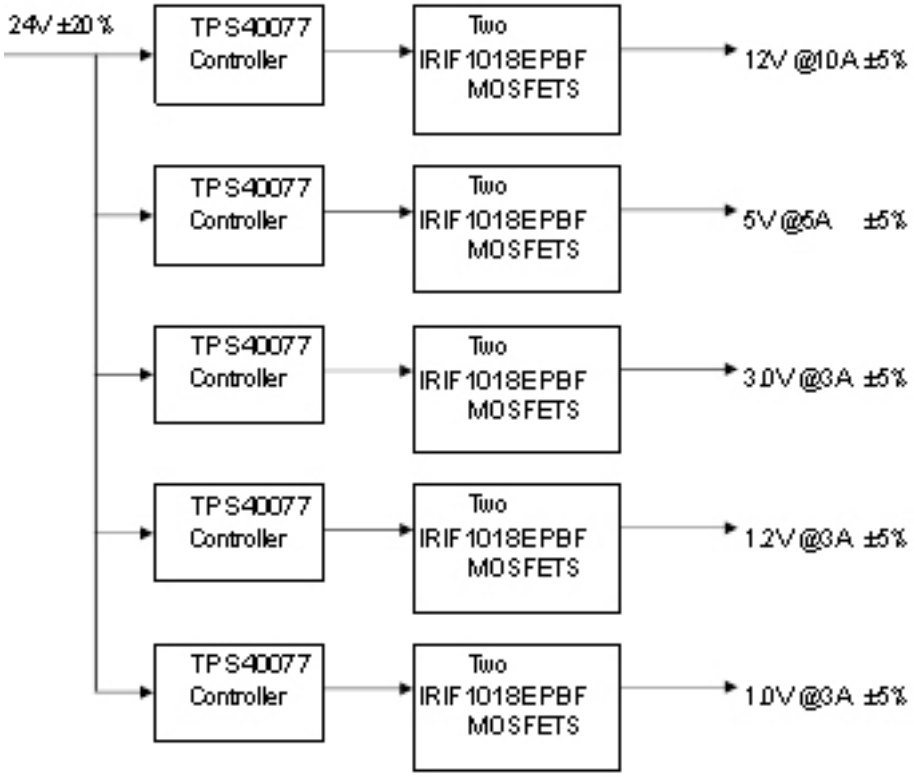

The BOM cost is high, even in high volume. By selectively choosing to integrate six MOSFETs into the iASIC design along with the five controllers (see area outlined in red, below), the part count can be reduced from 15 to 5 and the cost of the iASIC would be approximately $1.50.

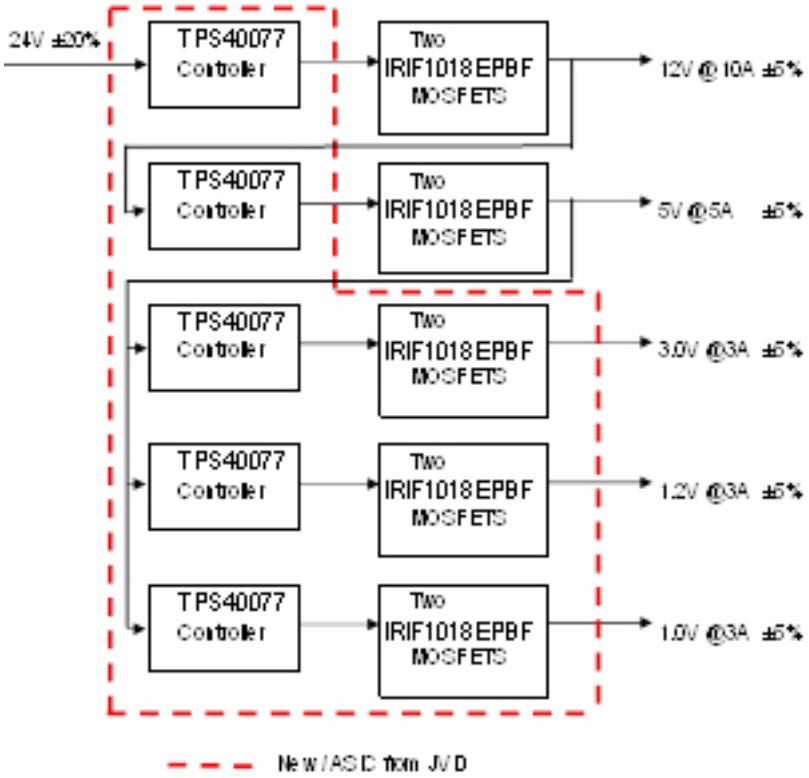

Power Management is as much about Power as it is about Finance. The maniacal focus on conservation of energy and power needs to be coordinated with the conservation of cash. The graph below clearly shows the financial economic benefits of integration using an iASIC. These numbers are typical and include amortization of all NRE and tooling costs to develop and put the iASIC into production. The vertical scale is the total estimated lifetime volume of the iASIC and the horizontal axis is the approximate cost of the components being integrated. Where does your application fit on this graph?

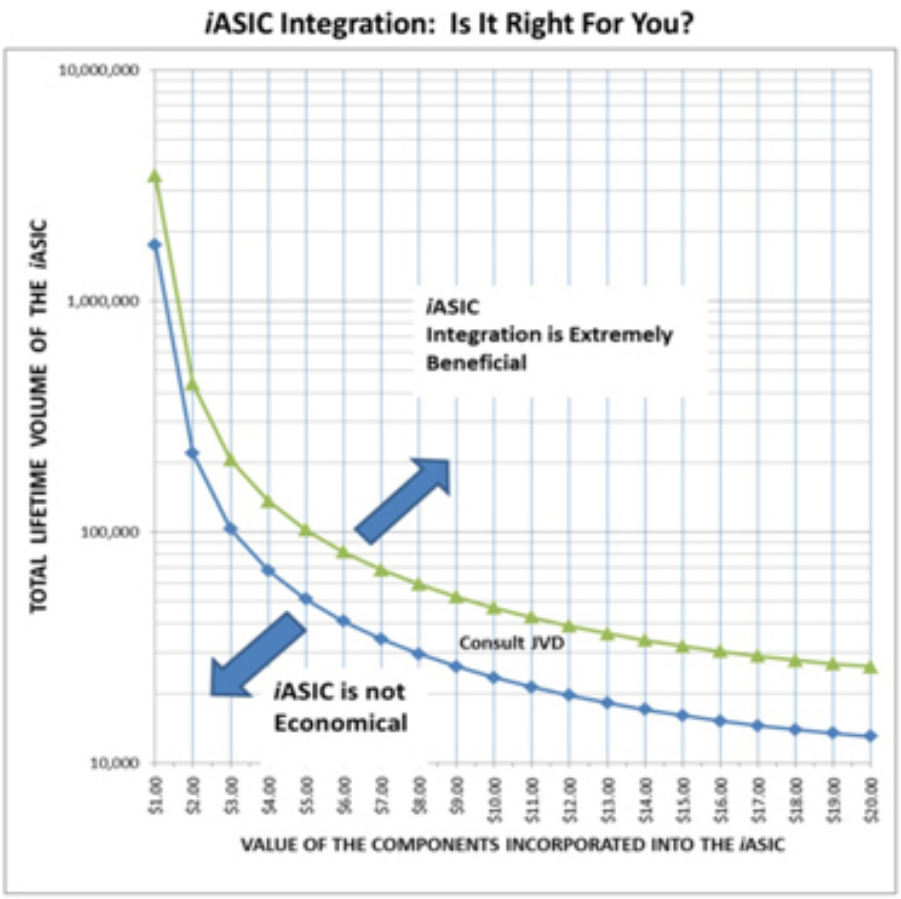

Thanks to the iASIC , custom analog solutions needn't require mega-dollars or mega-units for justification. Stop wasting money today with off the shelf solutions. Your unique power management needs should reflect a uniquely low cost solution.

Bob Frostholm is Director of Sales and Marketing at Analog ASIC company, JVD Inc. (San Jose, CA.) www.jvdinc.com *[1].*

Bob has held Sales, Marketing and CEO roles at established and startup Analog Semiconductor Companies for more than 40 years. Bob was one of the original marketers behind the ubiquitous 555 timer chip. After 12 years with Signetics-Phillips, Fairchild and National Semiconductor, he co-founded his first startup in 1984, Scottish based Integrated Power, which was sold to Seagate in 1987. He subsequently joined Sprague's semiconductor operations in Massachusetts and helped spin off its semiconductor group, creating what is now known as Allegro Microsystems.

Bob has also just completed a screenplay, Tags, a technology-mystery centered in Silicon valley.

Bob is the author of several technical articles and white papers. Email: bob.frostholm@jvdinc.com *[2]*

Source URL (retrieved on *03/09/2014 - 9:52pm*):

http://www.wirelessdesignmag.com/blogs/2013/02/who%E2%80%99s-managing-your-power-management?qt-digital_editions=0

Links:
[1] http://www.jvdinc.com
[2] mailto:bob.frostholm@jvdinc.com