Software Innovation Frees Designers from Wireless Design Complexity

New 2.4GHz wireless SoCs integrate silicon radios, powerful microprocessors and flash memory together with a novel approach to software architecture - making it much easier to develop winning applications

By Thomas Embla Bonnerud, Director of Product Management at Nordic Semiconductor

The 2.4GHz ultra low power (ULP) wireless sector has transformed in the last three-to-five years. From being a niche technology back then, proprietary products, ANT chips and *Bluetooth* low energy devices have pushed wireless connectivity powered by coin cell batteries into the mainstream. And now things are about to explode.

The challenge facing the silicon vendors is predicting just how that explosion will play out.

It seems very likely that proprietary technology will continue to be successful because such products can be optimized for applications such as wireless desktops where minimal latency and low power consumption are very important. But technologies such as ANT+ from ANT Wireless and *Bluetooth* low energy are rapidly expanding because they are able to seamlessly communicate with devices such as smartphones, PCs, and ‘health hubs’ from many manufacturers. That interoperability supports huge new wireless ecosystems.

It’s impossible to forecast which technology will lead. It’s possible that there will be plenty of space for each or perhaps one will move into the leading position.

The company I work for, Nordic Semiconductor, has implemented a strategy of three separate product families supporting proprietary technology, ANT+ and *Bluetooth* low energy (a hallmark element of the latest *Bluetooth* v4.0 specification) respectively.

Image 1: ANT+ and Bluetooth low energy are rapidly expanding because they are able to seamlessly communicate with devices such as smartphones. (Courtesy: Bluetooth SIG)

That's worked well, but customers are increasingly asking for greater flexibility. They say they'd like to design products around one technology and then swap to another with minimal redesign if market conditions dictate. Better still, customers would like to introduce products supporting a new technology – such as *Bluetooth* low energy – while at the same time retaining the capability to communicate with legacy devices that use a more established RF software protocol.

No company has ever introduced a ULP wireless connectivity technology that meets those demands – until the release of Nordic's nRF51 Series.

Focusing on the application

The philosophy behind the new range is to offer OEMs and ODMs common silicon that is equally adept at running proprietary protocols as it is running interoperable software stacks like ANT and *Bluetooth* low energy.

At the heart of these Systems-on-Chip (SoC) are brand new 2.4GHz radios allied to powerful ARM Cortex-M0 microcontrollers (see figure 1). The ARM microcontroller is a 32-bit device that brings more powerful computing power compared to the 8-bit

8051 core typically embedded in ULP wireless SoCs. The microcontroller has been designed for ULP operation and is well suited to these types of wireless connectivity applications. But while the hardware is impressive, the key innovation is in the application and RF protocol firmware.

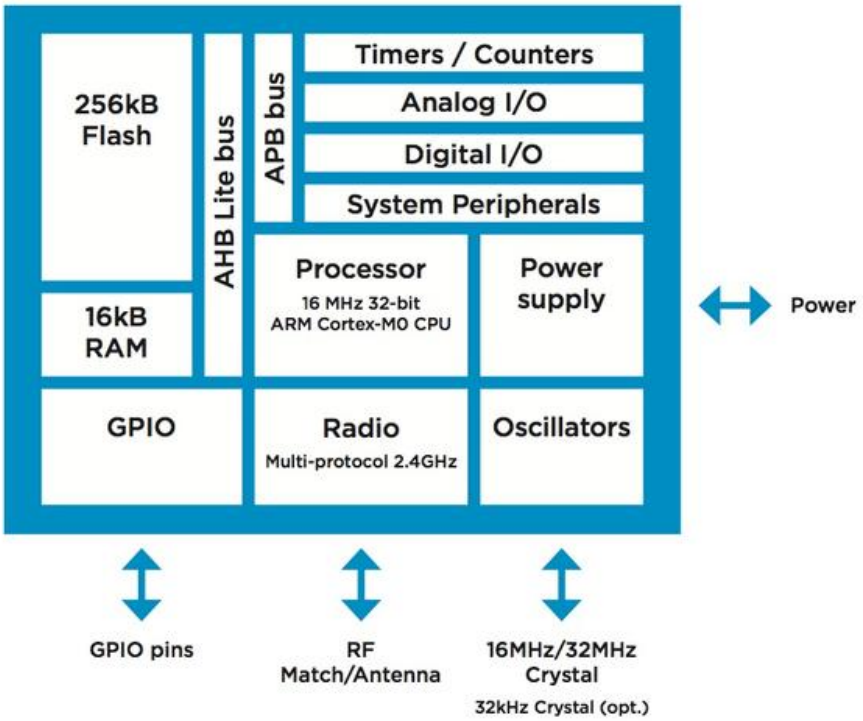

Figure 1: A schematic of Nordic's nRF51 Series. At its heart lies a new radio and ARM Cortex-M0 microcontroller

In typical ULP wireless connectivity applications the application code and RF protocol exist as part of a singular overall framework. This arrangement puts a lot of pressure on the developer to ensure applications perform as expected and in a timely manner – otherwise, disruptions can cause problems for the RF protocol.

Nordic's new products address this challenge by creating a clean separation between the application and protocol stack elements. This effectively removes all dependencies between the two. The stack, which is delivered in its entirety by the silicon vendor, is completely separate from the application in terms of dependencies.

Required resources needed by the stack are guaranteed in terms of availability and in terms of response times. This encapsulation of the stack as a separate entity to the application brings very significant advantages. In summary, the application developer can build, or port an application safe in the knowledge there are no compile or run-time associated dependencies or potential conflicts.

In addition, this arrangement means the developer can focus on developing in exactly the manner that serves the application best. This is not the case with

current wireless connectivity ICs whereby application and protocol code have an associated inherent coupling. Consequently, developers have to be on their guard for constraints and dependencies during the whole development cycle. Debugging can also be very time-consuming and difficult.

From an architecture perspective the nRF51 has two clear functional blocks that have complete autonomy from each other. The first block is the developer's application, the second is the protocol block which Nordic calls the 'Soft Device'. The Soft Device is a self-contained protocol block that has two variants, either a *Bluetooth* Low Energy stack or an ANT stack

The memory architecture is designed to be fundamentally "thread-safe" in operation, which ensures application and RF protocol software operate in a secure and predictable manner.

Answering the call to support both the latest RF protocols and legacy software on the same chip, some of the devices in the nRF51 Series can operate as multi-protocol devices. This is a facility that has never been possible with 2.4GHz ULP wireless technology. This is useful, for example, if an OEM wants to supply a product that can communicate with older Nordic devices running proprietary protocols while taking advantage of the interoperability of *Bluetooth* low energy for general communication.

In this arrangement, the *Bluetooth* low energy RF stack operates separately as a soft device while the Nordic (or other proprietary) protocol works together with the application program (see figure 2). A Soft Device manager decides which protocol takes priority and ensures that the other protocol is disabled.

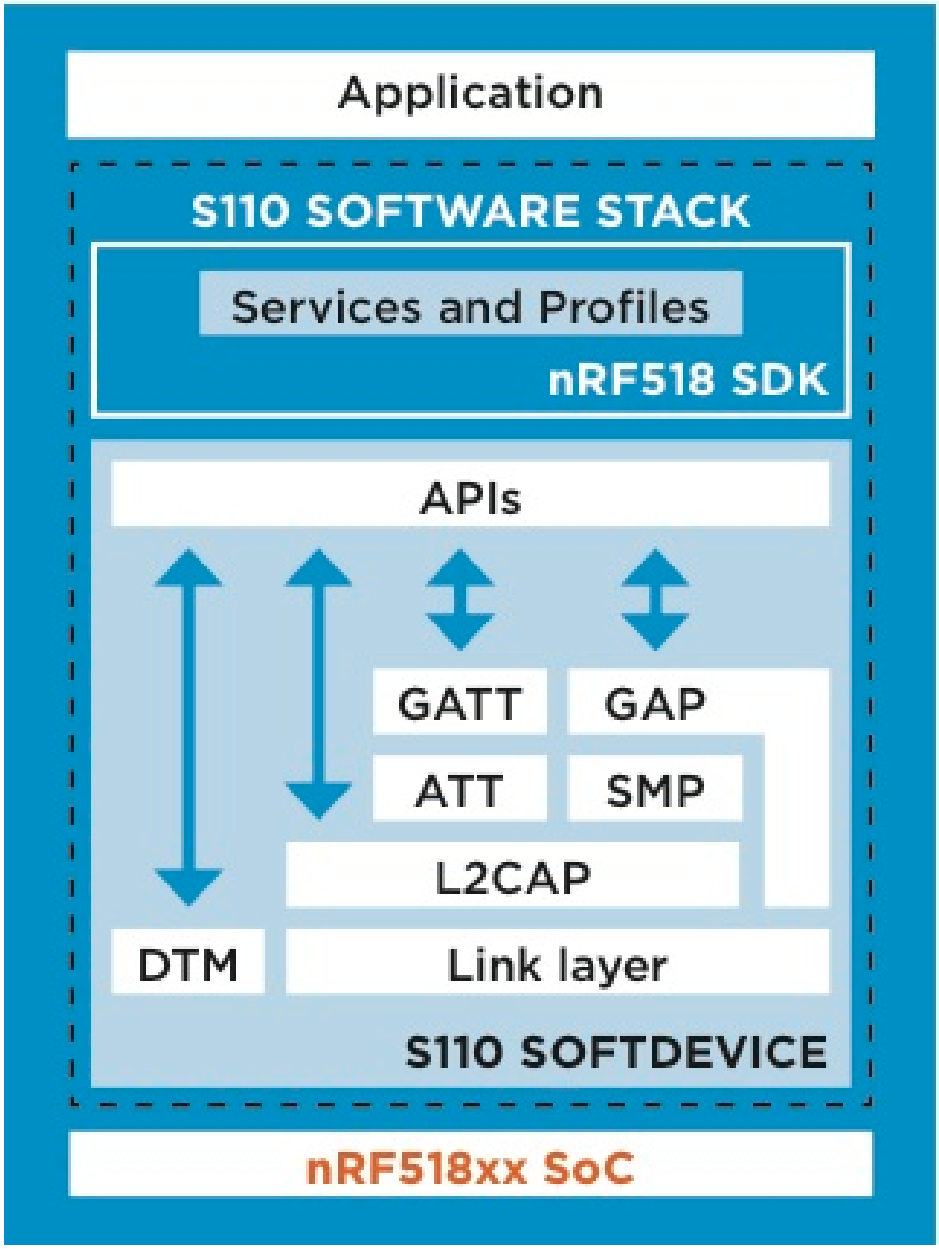

Figure 2: The developer's application and the Soft Device (shown here as a Bluetooth low energy stack) work autonomously

The nRF51 Series represents a leap forward in ULP wireless connectivity. The family's performance, ultra low power consumption and flexibility will provide a good platform for the major RF protocols for years to come. And the novel software solution frees designers from the integration effort, complexities and restrictions of chip vendor-supplied software frameworks and instead allows customers to develop their designs quickly and easily using the highly popular and familiar ARM Cortex programming environment.

About the author: Thomas Embla Bonnerud is Director of Product Management with Nordic Semiconductor. Nordic Semiconductor is a leading manufacturer of proprietary 2.4GHz ULP silicon solutions, a member of the group that developed the Bluetooth *low energy wireless specification and a member of the ANT Alliance (see www.nordicsemi.com).*

For more information on nRF51 Series, go to
http://www.nordicsemi.com/eng/Products/nRF51-Series-SoC *[1]*

2012

Source URL (retrieved on *09/03/2014 - 1:28am*):
http://www.wirelessdesignmag.com/blogs/2012/12/software-innovation-frees-designers-wireless-design-complexity?qt-digital_editions=0&qt-most_popular=0

Links:
[1] http://www.nordicsemi.com/eng/Products/nRF51-Series-SoC%20