Automatic Antenna Tuning Can Compensate for Environmental Changes Affecting RFID Readers

By Prashant Dekate, ams AG

Commercial RFID readers have been available on the market for over 20 years and are designed for a wide variety of end uses and therefore appear in various design implementations. Some examples include portable desktop readers, mobile handheld devices, and fixed machine or wall-mounted equipment. In addition to conventional applications, such as transportation, access control, and payment, HF-RFID readers have found use in automotive applications, electronic toll collection, personal computers, and in the mobile NFC platform.

One of the most challenging aspects of reader development is designing the antenna and the associated matching network. This will define how well the reader will perform in terms of “read range” and distance and data rates at a given power. To achieve uniformity across all manufactured readers, these readers are tuned to the ISO1443 standard with 13.56 MHz as the resonant frequency. Output power is dependent on the reader design performance; the lower the spectral power at 13.56 MHz, the more output power is needed to achieve card reads.

Across the broad range of readers available today, most will not be operating in as stable an environment as the production facility where they were calibrated. Even during production, environment tuning and calibration of the readers is required, due to component and material tolerances. However, once installed in the field, most readers will experience a dynamically changing environment, or at least undergo a one-time change in environment. This is compounded when metal is in close proximity, which can result in detuning the reader antenna’s resonant frequency and lead to a reduced read range. Some manufacturers use a low Q antenna to ensure the reader can still operate despite a harsh environment; however, this approach results in a reduced read range, even in ideal environments, thus negating the benefits of the contactless technology.

For example, if a desktop reader is placed on a metal table, or if a wall-mounted reader is mounted onto a wall with metal inside, the read range drops drastically and the reader may no longer comply with its published specifications. Significantly, the customer experience is compromised and may result in the consumer having to attempt accessing a locker or building multiple times. This article discusses a technique that addresses these changes in new surroundings and how they can be overcome with an intelligent algorithm embedded in a reader IC’s front end, enabling a simpler design cycle and cost-effective production.

During manufacturing, all readers have to comply with product specifications and the important parameters are:

1. Conformance to ISO standards
2. Low average current consumption
3. Minimum standby current consumption
4. Read range at a defined power consumed in antenna

Calibration in production requires additional time, but compensates for the component variations of the external circuitry. This only accounts for the production environment and does not compensate for detuning of an antenna in the field, which leads to non-conformance to the standard or specification. To achieve this, you must first be able to dynamically measure the detuning of the antenna. Figure 1 Illustrates an antenna topology and relevant building blocks to measure the detuning of the antenna.

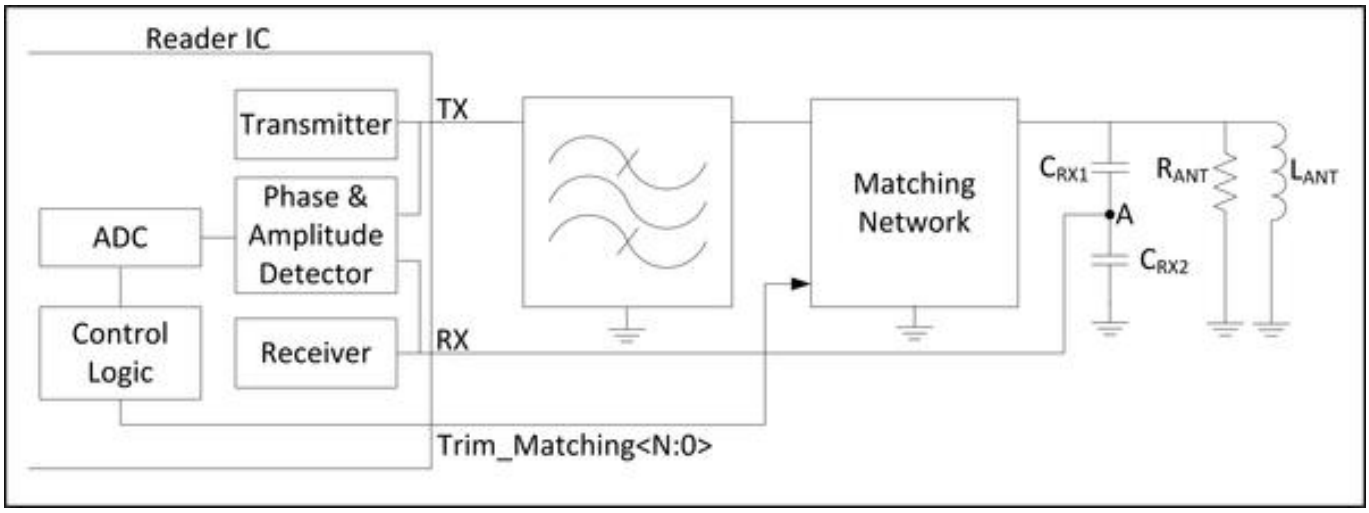

Figure 1: RFID Reader Antenna topology illustrating Automatic Antenna Tuning

The reader IC “knows” what signal is being transmitted at the TX pin. This signal experiences a phase shift caused by the matching network, which can be compensated for in the reader IC. At point “A,” the transmitted signal is sensed with a capacitive divider and is connected to the receiver’s RX pin. Knowing the phase shift due to the matching network, the phase detector can measure the phase difference between the TX and RX signals. In addition, the amplitude detector can measure the change in the amplitude of the detuned signal. These two values provide a good indication of how much the antenna has detuned from its 13.56 MHz resonant frequency. As a result, it is simple to calculate what needs to be changed in the matching network to compensate for the detuning. For example, additional capacitance can be added in parallel to alter the matching network.

Recent innovations by ams AG facilitate overcoming the detuning problem with a unique embedded Automatic Antenna Tuning (AAT) technology. The technique dynamically adapts to the matching network of the antenna, or upon user request. This technology has been integrated into ams’ AS3910 HF RFID reader and AS3911

HF NFC/EMV reader ICs. Readers designed with these devices will be able to deliver a maximum range regardless of the changes in the environment, thereby reducing production calibration to a minimum and guaranteeing best possible performance in the field. An antenna calibration command can be initiated at any time and takes less than 0.4 ms to complete.

Additional Benefit

This technology has an additional benefit which can significantly reduce the overall power consumption of the system. This is of special interest in battery-operated systems where power consumption is a critical design consideration. Currently available readers poll for a presence of a tag in the field. This is typically done every 200 ms for 5 ms to 10 ms. In the typical scenario of a wall mounted reader, it will poll for a tag 432,000 times in a day, whereas the actual readouts might be on the order of a few thousand. Assuming that 200 mA (a typical value) is consumed in the antenna, the average current “spent” in the reader for an entire day is around 5 mA to 10 mA. This is a considerable level of power consumption when a low-power system is the goal.

The basic functionality of a reader is to read a tag when it is presented. The tag also has an antenna that couples to the reader antenna. When a tag approaches the reader, the antenna of the tag detunes the antenna of the reader due to its mutual inductance. The antenna tuning front end already provides an option to detect a detuning of the antenna. This measurement can be done very quickly and is key for the concept of “inductive wakeup.” In this mode, the reader IC can be set to a very low power sensing mode where it polls for a detuning of the antenna or, in other words, checks for inductive changes around the antenna. The microcontroller connected to the reader IC can be set to a deep sleep mode, enabling a very low power state so the system consumes just a few µA. Then, when a tag is presented, the antenna is detuned by a certain amount. When the reader IC with an antenna tuning front end detects this, an interrupt can be generated. The microcontroller, currently in deep sleep, can react to the interrupt generated by the inductive wakeup function when trying to read a tag. This means that the high current consuming function, tag readout, is only executed when a tag is actually presented and thereby drastically reduces overall current consumption.

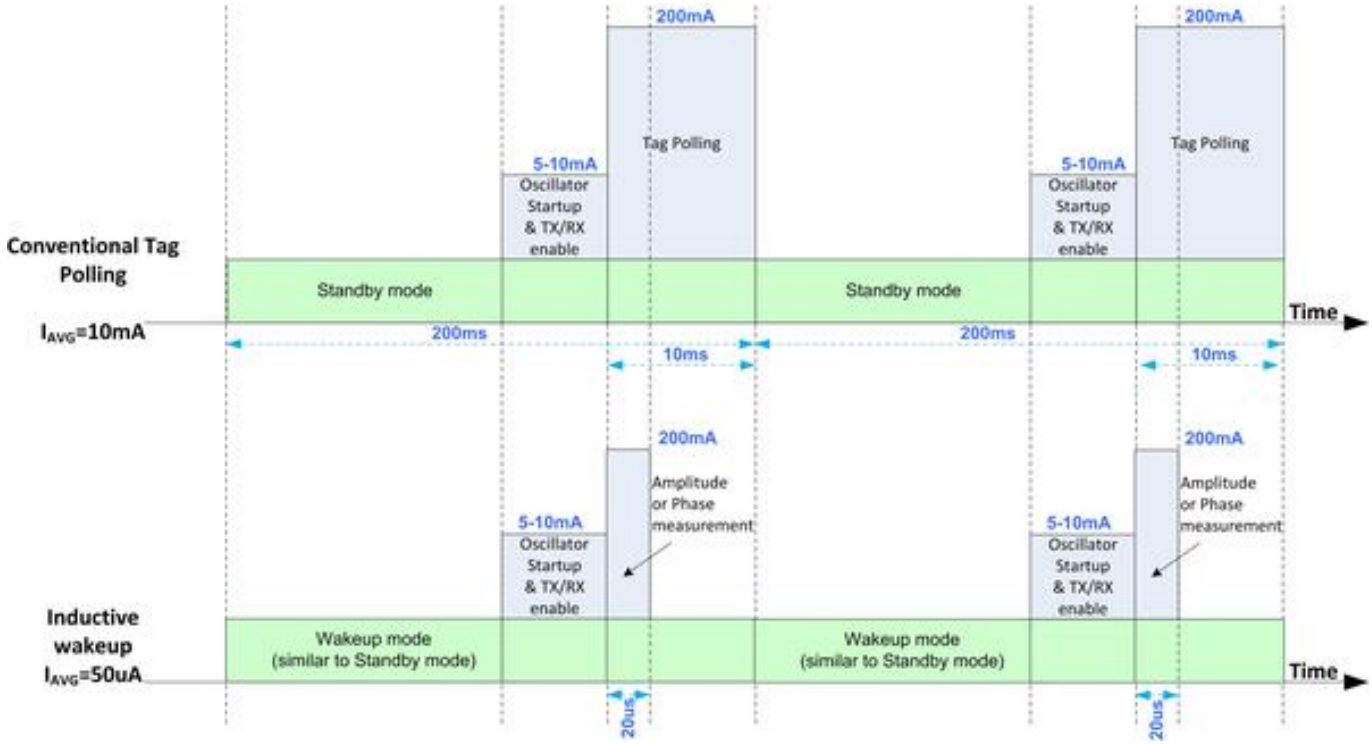

Figure 2. Transient signals demonstrating the Average current in polling mode and inductive wakeup mode (Note: the diagram is not to scale)

The illustration in figure 2 shows the transients for conventional polling for tag vs. inductive wakeup. The upper graph shows 2 of 432,000 cycles for a day. The lower transient shows how the inductive wakeup dramatically reduces the major contributing portion of the current consumption by reducing the time for which the antenna transmits and consumes 200 mA.

In conclusion, this unique automatic antenna-tuning concept not only reduces calibration cost during production, but it also provides optimal performance in the field with maximum read range and reduced power consumption. In addition, this concept also enables an elegant way of reducing current consumption for systems with low power requirements.

December 05, 2012

http://www.wirelessdesignmag.com/blogs/2012/12/automatic-antenna-tuning-can-compensate-environmental-changes-affecting-rfid-readers?qt-digital_editions=0&qt-most_popular=0