Mobile HD Video: What are my options?

Graham LS Connolly, Member of Technical Staff, Fairchild Semiconductor

In today's consumer products, USB and HDMI™ have become household names and are synonymous with ultra-portable connectivity and HD video. As technology has improved and as the consumer's demands for more features, high definition (HD) video playback and social networking capability continues to grow then so has the challenge constantly increased to maintain the ultra slim form factor on mobile products that help us to stay connected with the world.

Consumers are drawn to the appeal of crisp color and contrast in HD video; the smooth replaying of video and being able to watch it on a high resolution display. These characteristics are influenced by the hardware such as the physical size of the display; the display pixel resolution; hardware processor architecture (dual core, quad core); compression format for transmission. For example, if we consider the leading smart phone manufacturers, their displays can range typically from 3.6 inches to 5.3 inches and their camera resolutions being 5MP to 12MP (or even 42MP as announced at the recent Mobile World Congress by Nokia). When we consider tablets, then the display size is typically 7 inches or 10 inches.

Now with the advent of tablet PCs, smart phone and next generation gaming devices there are many other standards based protocols that are being considered for transferring HD video in addition to proprietary architectures. Such standards include USB3.0, DVI, HDMI™, DisplayPort™, MyDP™ (SlimPort™) and MHL™.

USB3.0

Since its introduction, circa 2010, the USB3.0 infancy period had been focused on the HDD (Hard Disk Drive) market to facilitate the rapid transfer of significant amounts of data up to 5Gbps. For example, a 10GB file transfer occurs in 25-30 seconds versus 5 minutes. For the future use of HD webcams and newer docking stations to PC/TV monitors will begin to add HD, video transfer to USB3.0 applications. Another key factor of USB3.0 is also the backward capability to legacy USB2.0 (480Mbps). Power dissipation and power management of USB3.0 is a challenging factor that has potentially limited its adoption into mobile products (excluding HDD) but that trend will change as the full duplex USB3.0 architecture is utilized further.

Digital Visual Interface

Digital Visual Interface (DVI) was developed to enable us to have an industry standard that facilitated the transfer of digital video content between a video source and display monitor and initially it was utilized via the VGA (Video Graphics Array) connector and is commonplace in offices as we plug in our overhead projector into our PC. DVI is based on a Silicon Image format called PanelLink™ that

defined 3 channels of TMDS (Transition Minimized Differential Signaling) data mapped to the RGB (24bit color) and a fourth channel for the clock (165MHz max). Backward compatibility for analog displays is available in the DVI specification and transmission is done via the DDC (Direct Data Channel), Extended Display Identification Data (EDID) communication and as uncompressed video up to data rates of 3.96Gbps (excluding 8b10b encoding overhead) for a single link DVI system connection. Market trend and consensus is that this format will be obsolete by 2015.

High Definition Multimedia Interface

HDMI (High Definition Multimedia Interface) consumer products began to appear circa 2003 and it has now become the de facto standard recognized worldwide to represent HD Video and has become a household name and we all seek that logo on our consumer product. Now HDTVs, game consoles, set-top boxes, DVD players are all part of our HDMI connected home theater networks. There are now over 1100 Associates ('Adopter') subscribing to manufacturing HDMI based consumer products with over 2 Billion having been shipped as of the end of 2011. The founders of HDMI (Silicon Image, Philips, Hitachi, Sony, Matsushita, Toshiba and Thompson) were fortunate in terms of timing to have the backing of the motion picture industry to create such a specification that superseded the DVI (Digital Visual Interface) specification. HDMI was a smaller connector and (primarily) added audio and new video formats. There have been several revisions of the HDMI specification (now at Rev 1.4b) that expands to meet the needs of the constant evolution of high resolution HDTVs and monitors. Figure 1 shows the block diagram of the HDMI architecture with the source being a BluRay player and the sink the HDTV.

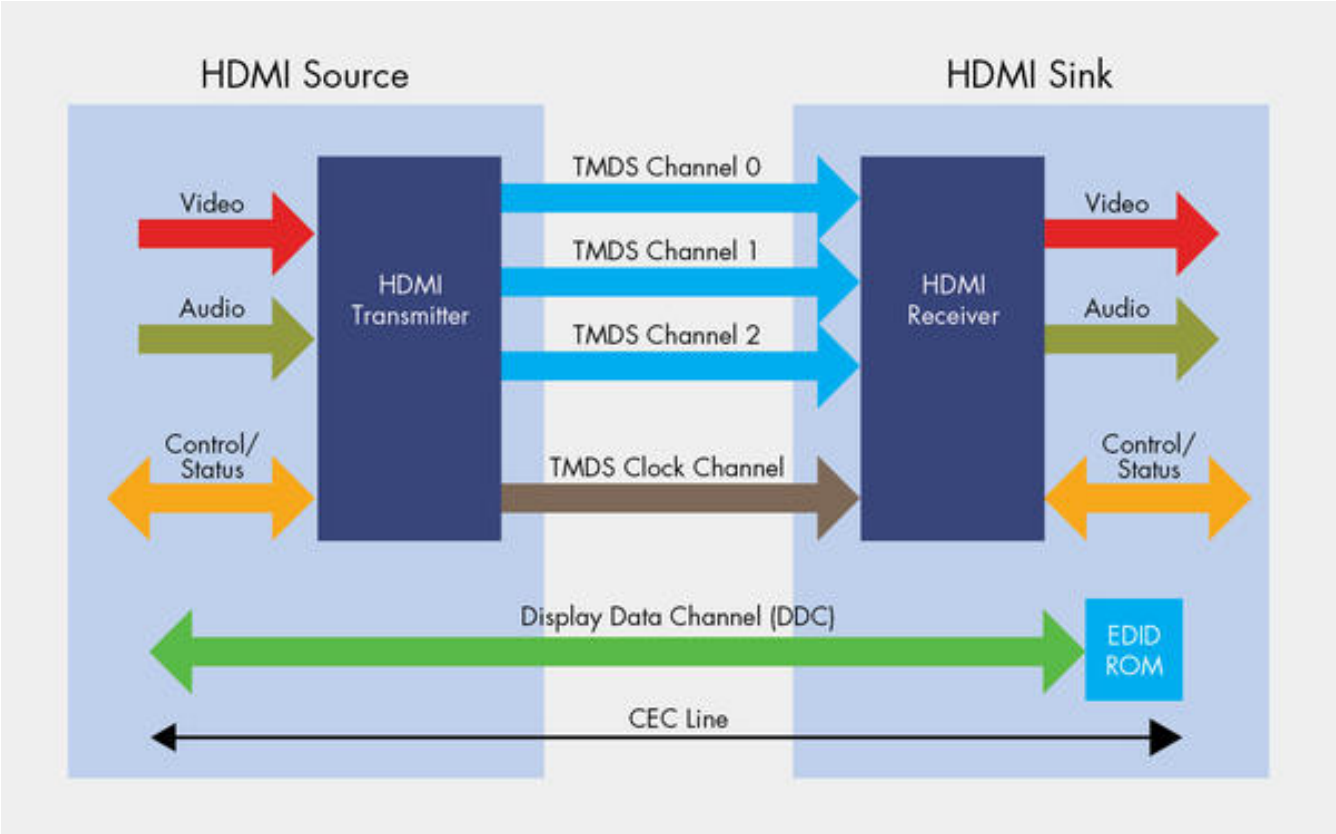

Figure 1: HDMI Architecture

It is now very common place to have multiple HDMI connectors on an HDTV to network all our HD capable sources.

Electrically it is the successor to the DVI link migrating to the realm of digital video since it does not support analog backward compatibility for the displays. HDMI sources and sinks are expected to support DVI and HDMI to DVI adapters are commercially available. Since its introduction clock frequencies, display resolutions and data rates have increased to keep up with the demand of the consumer – clocks have gone from 165MHz to 340MHz; display resolutions (24bit color) from 1920x 1200p60 to 4096×2160p24; and data rates from 4.95Gbps to 10.2Gbps (including 8b10b encoding overhead).

HDMI Rev1.4a (released March 2010) now includes 3D movie and broadcast criteria and displays for deep color for the foreseeable future and will remain a part of our consumer world until we migrate to wireless HD.

Specific to HDMI on smart phones there are a few products that utilize the micro-HDMI connector that enables an HDMI connection directly to the HDTV. A disadvantage of this implementation is that there is an extra connector on the phone to accommodate in its slim form factor.

DisplayPort/ Mobility DisplayPort

DisplayPort, a standard defined within VESA circa 2006, is more popular in the PC environment as it was defined to be the interface between graphics card and display. PCs that originally had HDMI ports soon migrated to DisplayPort.

DisplayPort was also defined as an alternative to HDMI and is recognized to co-exist with HDMI rather than replace it. There are similarities between the two technologies but a primary difference is that DisplayPort has an embedded clock within the data stream. At the time of introduction, DisplayPort Rev 1.0 supported 2.7Gbps per lane in the link and had an AUX (control) channel of 1Mbps. Latest revisions of DisplayPort will support up to 21.6Gbps and hence allows up to four 1080p60 HDTV displays to being supported simultaneously. Figure 2 shows the current definition of DisplayPort architectures to transport audio/video content. The main link can comprise of 1, 2 or 4 data lanes. The AUX CH is a differential control (bi-directional) channel.

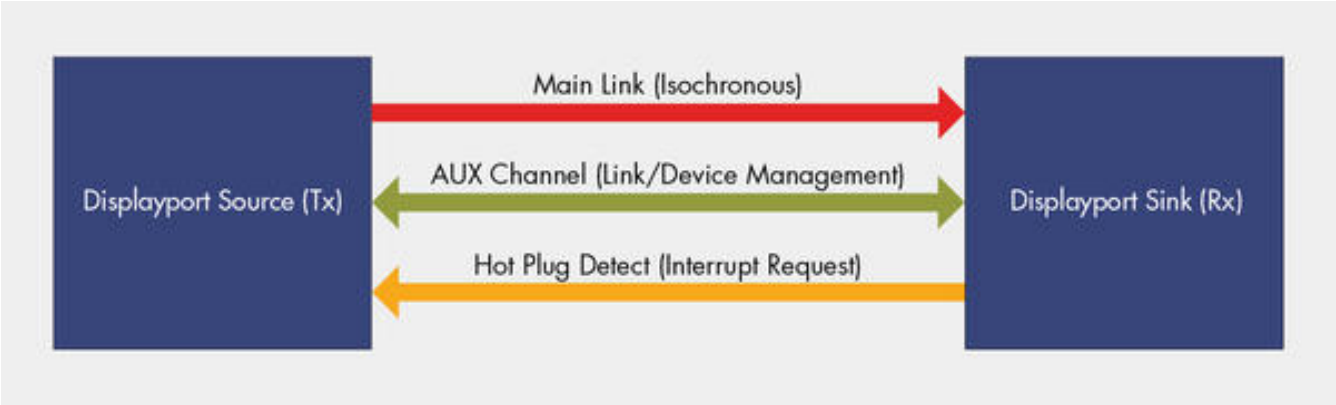

Figure 2: DisplayPort Architecture

There are many camps that prefer DisplayPort and, as mobile products proliferate, DisplayPort is beginning a migration path vie eDP (embedded), iDP (internal) and MyDp to migrate beyond the PC. Apple has adopted DisplayPort as its video connection for Thunderbolt applications and accessories. Mobility DisplayPort (MyDP) has been introduced to the community at the 2011 Mobile World Congress and 2012 CES with products demonstrated to share DisplayPort and the micro-USB connector. These products are also being touted as the roadmap for the royalty free alternative to MHL, with specification release to the general community targeted for around June 2012. MyDP was derived by STMicro and Sony-Ericsson (now Sony Mobile) to be connector agnostic but was defined as a 5-pin connector for mobile devices. In addition, Analogix have introduced SlimPort which is compatible with MyDP. As time progresses it will be seen how MyDP (and Slimport) will compete with MHL as the MHL protocol is gaining traction in the mobile and consumer electronics arena with many smart phones, accessories and HDTVs that are MHL enabled appearing on the market.

MHL (Mobile High Definition Link)

MHL was introduced by Silicon Image along with consortium partners of Nokia, Samsung, Toshiba and Sony and since the first released specification in June 2010 there are now over 100 adopters that are part of the consortium. Initially there was hesitation whether it would take off but in the last 12-18 months several key product manufacturers including Samsung, HTC, LG, Huawei, Toshiba and Sharp in both the mobile device and display products arena have accelerated the adoption of MHL dramatically with (as of May 2012) around 50 mobile and 65 display device models being MHL enabled (according to the MHL website).

Since earlier this year, full 1080p/60fps processor capability has been lacking in the industry to fulfill the appetite of the consumer but that is naturally imminently just around the corner and should just further penetrate the market for the MHL consortium.

So Which Technology Do I Use?

As has been summarized, there are several alternatives for transferring HD video that each end product manufacturer has for consideration. Many of the choices will

be based upon their preferences, what they are most familiar with, what may have the fastest and most cost effective path forward but in order to compete with other manufacturers for market share one may have change to a different technology than originally planned. This can be seen in handsets where HDMI may be replaced with MHL to take advantage of reducing to a single connector. Figure 3 shows a summary of such options.

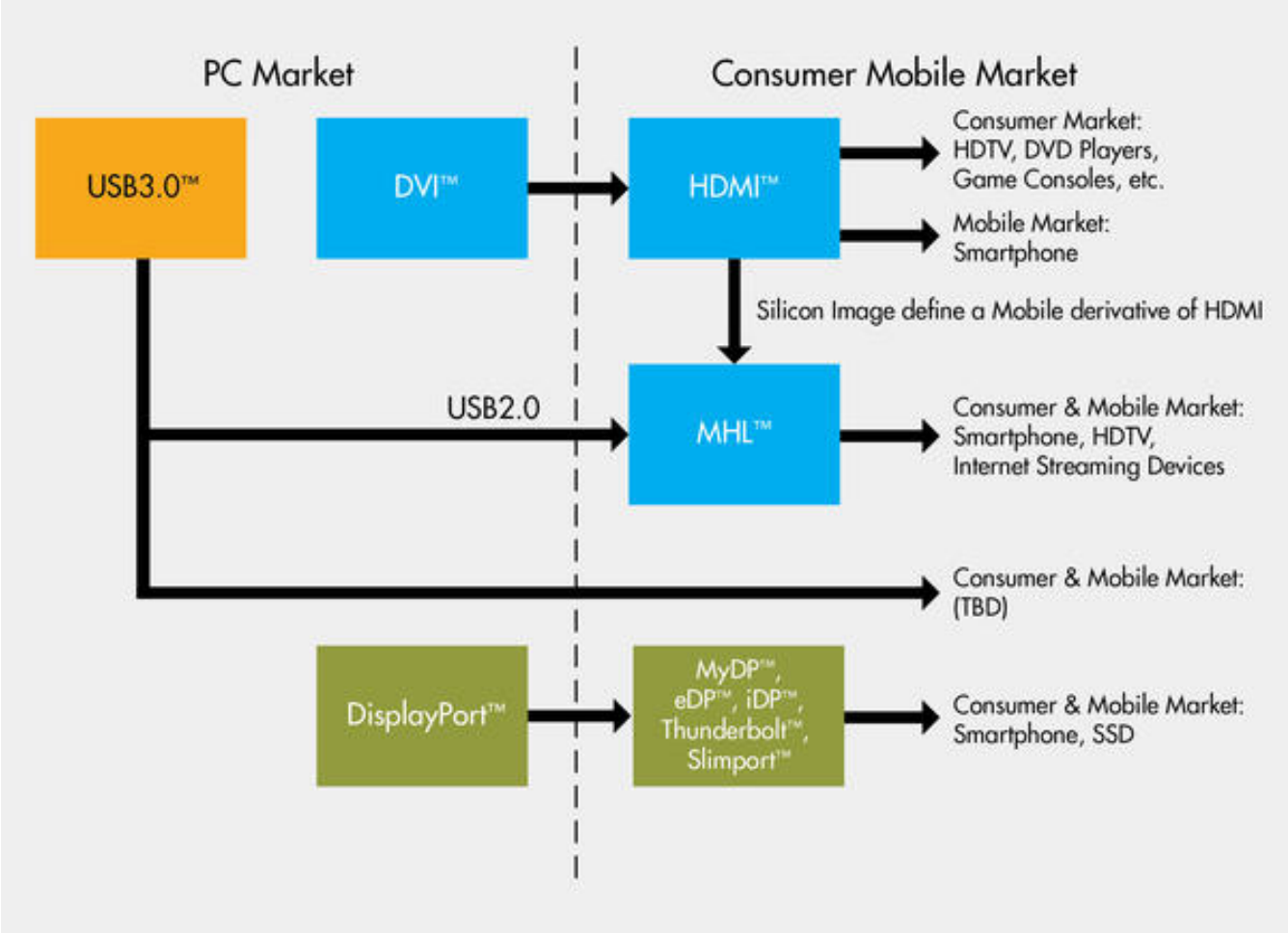

Figure 3: Options for Transporting HD Video in Mobile Applications

What is also going to be interesting, in the rapidly changing world of mobile products, is the legacy processor versus upgrading and how many paths may have share that 5-pin connector. Figure 4 illustrates a scenario whereby a 1080p/60fps MHL transmitter and 2 USB2.0 ports can share the 5-pin connector.

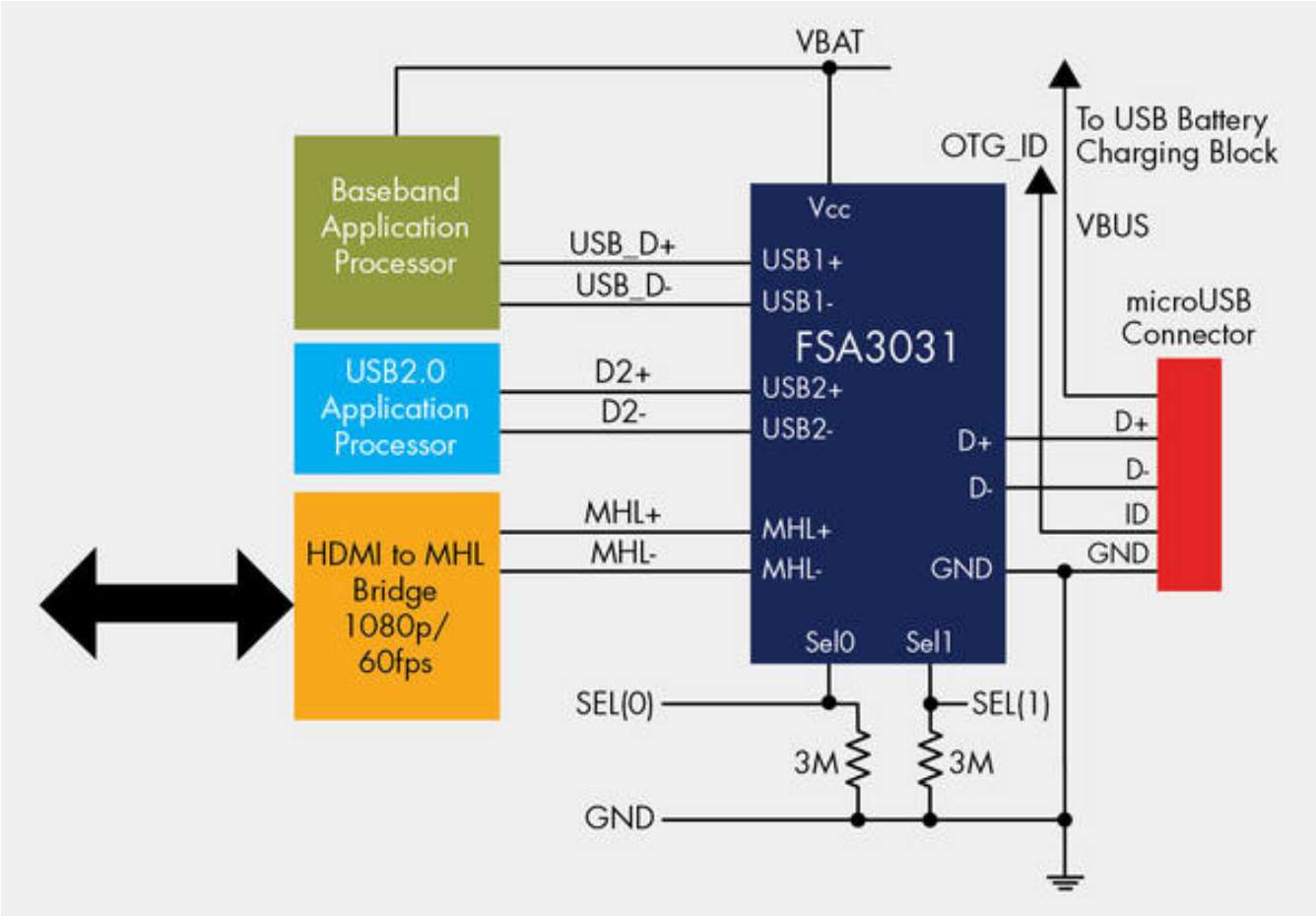

Figure 4: Sharing HD Video (1080p/60fps) and Multiple USB2.0 Paths with 5-pin Connector

www.fairchildsemi.com [1]

October 2, 2012

Source URL (retrieved on *03/11/2014 - 8:07pm*):
http://www.wirelessdesignmag.com/blogs/2012/10/mobile-hd-video-what-are-my-options?qt-most_popular=0&qt-blogs=0

Links:
[1] http://www.wirelessdesignmag.com/www.fairchildsemi.com