1 Watt Driver Amplifiers Offer 2-Stages of Gain and Integrated Features to Simplify RF Design

Today’s radio designs, and other RF communication equipment, are being made to consume less power while occupying less physical space, which leads to less available board area for heat sinking. ADI has kept pace with these requirements by creating the ADL5605 and ADL5606 two-stage 1 Watt RF driver amplifiers. The highly-integrated ADL5605 driver amplifier, 700 to 1000 MHz, and ADL5606 driver amplifier, 1800 to 2700 MHz, are pin-compatible, easy-to-tune, and integrate two stages of gain, thereby saving significant board space when compared to traditional discrete designs. Furthermore, the new RF driver amplifiers integrate internal active biasing and a fast shutdown function for applications that require a power saving mode, or for applications that transmit intermittently. These high performance broadband RF driver amplifiers are well-suited for a variety of wired and wireless applications including cellular infrastructure, Industrial Science Medical (ISM) band power amplifiers, defense equipment, and instrumentation equipment.

The ADL5605 and ADL5606 GaAs HBT drivers provide extremely flat gain and very high output third order intercept (OIP3) specifications across their tuned frequency range. These features eliminate the need to compensate for gain loss elsewhere in the signal chain while enabling the signal strength to be increased, without compression, prior to the power amplifier stages. The ADL5605 provides an extremely flat gain of 23 dB, a P1dB of 31.1 dBm, an OIP3 of 44.3 dBm and a noise figure of 4.8 dB at 943 MHz. The ADL5606 provides an extremely flat gain of 23.8 dB, a P1dB of 30.7 dBm, an OIP3 of 45.7 dBm and a noise figure of 4.8 dB at 2140 MHz. For lower gain 1 W requirements there is the broadband ADL5604, 700 – 2700 MHz. The ADL5604 provides an extremely flat gain of 12.2 dB, a P1dB of 29.1 dBm, an OIP3 of 42.2 dBm, and a low noise figure of 4.6 dB at 2630 MHz. All of the 1 W’s amplifiers require few external components for tuning, making these amplifiers easy to implement in a wide variety of applications. Furthermore, the RF driver amplifiers offer low 5 V power consumption as the ADL5604 only consumes 318 mA, the ADL5605 only consumes 312 mA, and the ADL5606 only consumes 360 mA. The driver amplifiers are also rated to an ESD rating of ±1 kV (Class 1C), which makes them robust in high volume manufacturing environments.

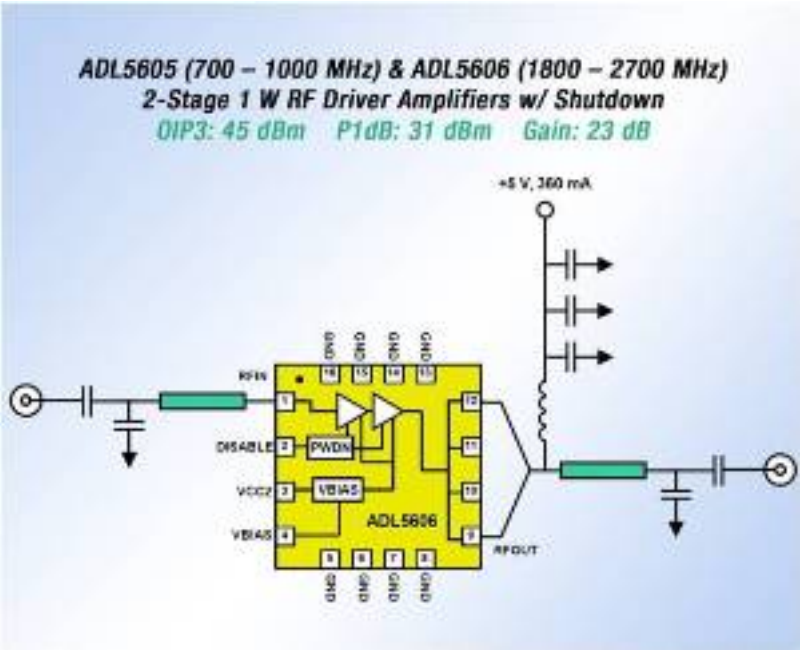

The ADL5605 and ADL5606 also deliver excellent ACPR versus output power. Both drivers can deliver 17 dBm of output power, at their respective tuned center frequencies, while achieving better than -55 dBc of ACPR.

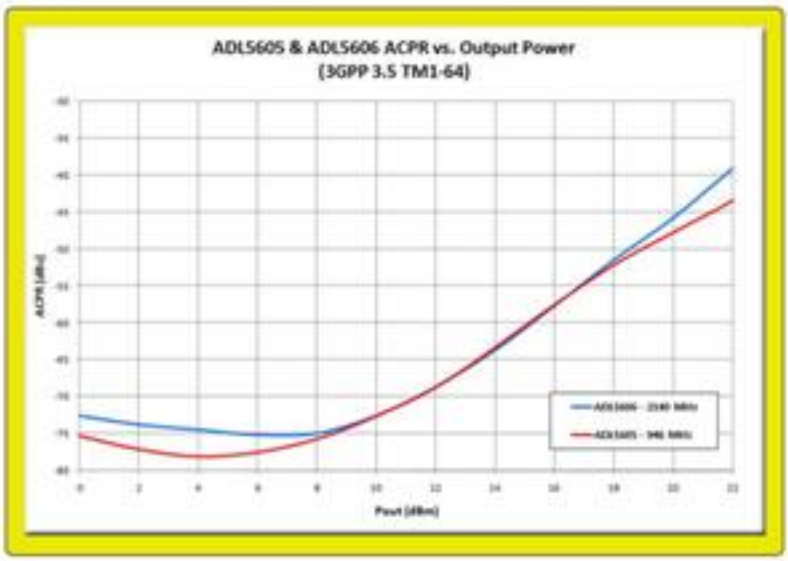

The ADL5605 and ADL5606 further simplify RF design by eliminating the need for complicated external tuning. Both drivers only use 50 ? lines at the input and output of the amplifier, and also do not require bias resistors or tuning resistors, unlike competing solutions. The ADL5606 only needs one shunt capacitor at its input and one shunt capacitor at its output for tuning. The lower frequency ADL5605 uses the same shunt capacitor topology and one additional series inductor at the output in place of a long 50 ? transmission line. The tuning similarity, and pin-compatibility, of the ADL5605 and ADL5606 enables a common platform approach where the same circuit board can be used to cover all commonly used cellular frequencies from 700 MHz to 2700 MHz.

The ADL5605 and ADL5606 drivers were also designed and packaged to simplify thermal considerations. The drivers each consume best-in-class power consumption which firstly reduces the amount of heat that is created. Secondly the reduction in generated heat allows the drivers to be packaged in a compact 4 mm x 4 mm 16-lead LFCSP that is grounded on two opposite sides. That pinout allows for a continuous ground plane to be made on the circuit board underneath the driver amplifier. The combination of continuous ground plane on the circuit board, the use of thermal transfer vias underneath the driver amplifier, and the exposed paddle incorporated into the bottom of the LFCSP package create a compact driver amplifier solution that is thermally efficient. Both drivers can be kept within safe operating temperatures without the need for forced air for cooling and are fully specified for operation from -40°C to +85°C.

Another way Analog Devices helps improve RF design is with the amount of information provided in our data sheets. Data provided such as variation versus temperature, voltage supply, and operating frequency reduces the amount of qualification time a designer needs to spend. That reduction in qualification time can significantly improve a projects' time-to-market.

Analog Devices improves RF design in multiple ways; through innovative circuit design, thermally efficient packages and pin-outs, simple tuning requirements, and detailed data sheet information. These attributes allow RF designers to go to market quickly with solutions that meet their needs for smaller, lower power consuming systems.

May 29, 2012

Source URL (retrieved on *04/16/2014 - 11:43am*):
http://www.wirelessdesignmag.com/blogs/2012/05/1-watt-driver-amplifiers-offer-2-stages-gain-and-integrated-features-simplify-rf-design?qt-digital_editions=0