Building a Successful All-CMOS Silicon Oscillator - An Age-old Problem Finally Solved

Steve Cliffe, VP Worldwide Sales and Marketing, eoSemi

The march of silicon integration has proved irresistible in almost every area of electronics design. Even the most intractable problems such as mixed signal circuits have succumbed to the power of CMOS: in the process, vast swathes of hardware and software have been ‘sucked’ into the silicon chip.

Oscillator design is one of the very few exceptions to this rule. As soon as you learn a little about the subject, it becomes clear that it’s a special challenge – and it becomes obvious why the existing solution, the crystal, has been in use for nearly a century now.

It’s not so much that crystals are a great solution to the problem of providing the ‘heartbeat’ of an electronic circuit – in fact they are large, temperature-sensitive, physically delicate, susceptible to electrical noise and impose constraints on the designer that should be unacceptable for a component that brings so little value-add.

It’s more the fact that building an oscillator in silicon is equally challenging. Unconstrained, an all-CMOS oscillator exhibits variation over temperature of around 30,000 parts per million (ppm); physical stress can cause changes of the order of 1,000ppm; tuning precision is around 0.1 percent; supply current can be measured in milliamps.

All of these figures are orders of magnitude away from what is required. In short, silicon oscillator design is hard.

But despite its fundamental shortcomings, CMOS is the only game in town if you’re looking for a mature manufacturing process, stable supply chain, and the potential to integrate your oscillator with other electronic circuits. Every major silicon manufacturer has therefore invested in trying to invent a CMOS oscillator. The semiconductor industry’s main customers, in particular the cellphone makers, have added their encouragement and investment. And yet the problem has remained

unsolved.

This is the challenge that the eoSemi team took up a couple of years ago: and now a challenge that has been successfully overcome.

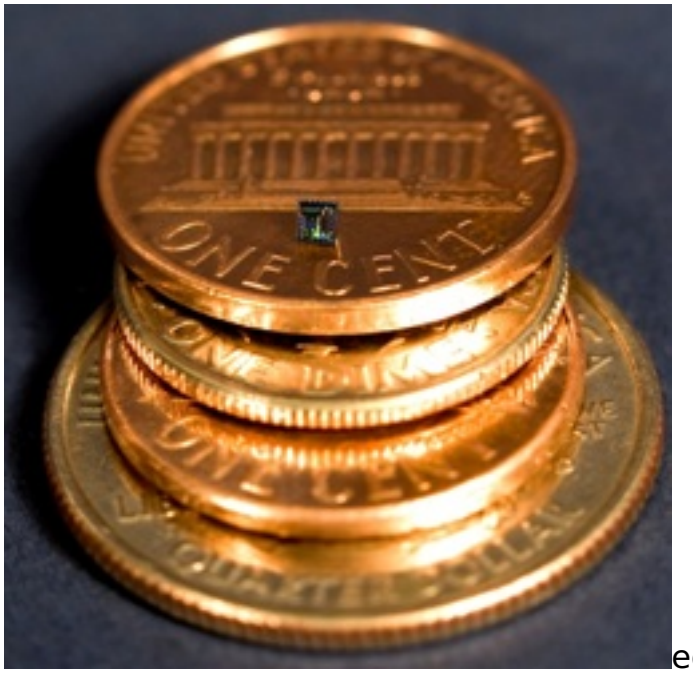

eoSemi's newly launched ATOC (Accurate Timing Oscillator Circuit) technology has enabled us to deliver samples of a 32kHz all-CMOS oscillator (the type that is routinely used in smartphones, amongst other products) that delivers 30ppm frequency variation over temperature, tuning accuracy of around 2ppm, and draws an active current of just 8µA.

Just as importantly, our new device is compact and requires none of the support components needed by a traditional crystal: thermistors for temperature compensation and external capacitors, for instance. And there are no onerous board layout stipulations such as exclusion zones around and beneath the component, as there would be with a crystal. Where the crystal might occupy 80mm2 of space in an eight-layer board, an ATOC component will occupy just 2mm2.

The key to creating this new range of products, which will be commercially available in Q3 of 2012, is a radically different way of designing the oscillator and its accompanying tuning circuitry. ATOC uses proprietary techniques to sense and compensate for changes in temperature and physical stresses within the device. Part of the physical structure is an innovative stress sensor and a temperature sensor that is accurate to 0.025K. The oscillator's output frequency can be tuned instantaneously in real-time, and the same algorithms compensate for drift over the lifetime of the device.

In addition to the physical silicon structures, which are protected by patent, our design team's background in programmable analog has allowed them to devise very precise algorithms, both for the essential factory calibration process and for the on-going tuning of the oscillator throughout its lifetime.

The potential doesn't stop with the 32kHz devices for which handset manufacturers

are crying out – our all-silicon implementation will also allow us to build a roadmap that includes dual-frequency components, system-in-package (SiP) versions and eventually timing sources that integrate fully with the PCB or a larger SoC.

These developments mean that, for the first time, the dominance of crystals in the timing market will be seriously challenged. One of the last bastions resisting silicon integration is about to fall.

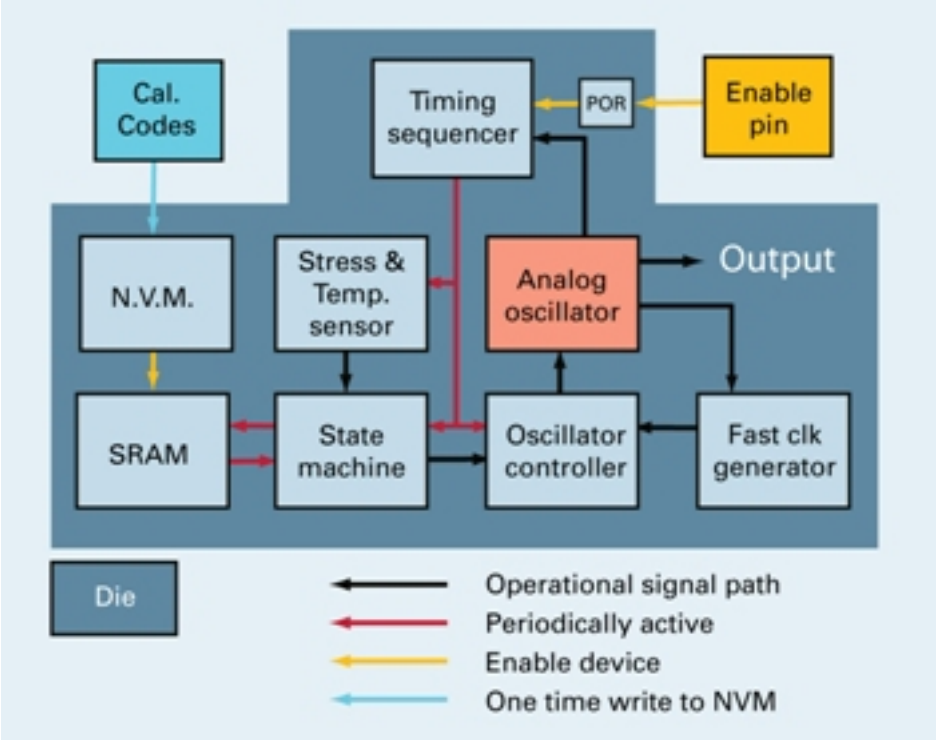

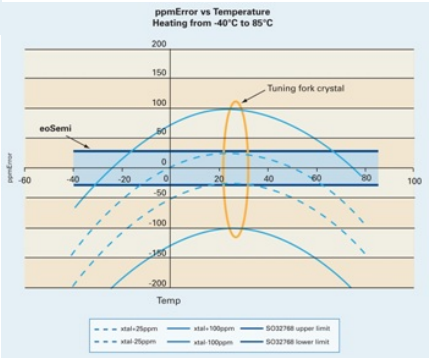

About the author
Steve Cliffe has more than 25 years experience in the electronics industry with significant exposure to global markets. He joined eoSemi from ProVision, where he was CEO. Prior to this Steve was CEO at Xintronix; VP of sales and marketing at Nanotech; sales, marketing and operations director for Global Silicon and Asia Pacific sales director at Dialog Semiconductor.

www.eosemi.co.uk [1]

Posted by Janine E. Mooney, Editor

March 27, 2012

Source URL (retrieved on *09/02/2014 - 5:42pm*):
http://www.wirelessdesignmag.com/blogs/2012/03/building-successful-all-cmos-silicon-oscillator-age-old-problem-finally-solved

Links:
[1] http://www.eosemi.co.uk