Optimizing RF Systems

Pushkar Nandkar

Balasatish Gurlinka

Wireless technology, with its ability to increase system flexibility and mobility, has become an integral part of many embedded and consumer applications. Even a simple RF system, however, introduces many critical design issues with a fair number of tradeoffs. This article explores how to optimize RF design for critical data transfer applications and power critical data transfer applications. In this regard, the best methodologies for designing optimized systems are based on parameters including power consumption, delay, throughput, quality of service, security, robustness to noise, development complexity, difficulty in integration, and cost. Most of these issues are application dependent.

In general, wireless applications can be broadly classified in two categories:

Power-Critical Applications: For battery-based wireless applications, power has become a very critical factor in design. For example, in case of applications with slow moving signal rates like monitoring the temperature of a process, the design can be more optimized for power. The delivery of the data is guaranteed but the primary emphasis is to reduce power consumption and increase battery life.

Data Critical Applications : In areas like healthcare and nuclear activity monitoring, applications require data transfers to be accurate and on time. The design is more focused on development of robust and dynamic protocols and hence sometimes has to trade off power consumption for reliability.

Optimizing a system includes optimizing the system design components as well as the system design process. In this article the system design optimization is discussed. It is better to optimize a system based on the metrics it is evaluated. The standard metrics used for evaluating a wireless system are power consumption, delay, throughput, security and quality of service. The type of application (power critical or data critical) decides the metrics to be considered for optimization.

Power Consumption
In power-critical applications, system design is focused on minimizing power consumption. However, in the case of data-critical applications, power efficiency may need to be sacrificed to achieve timely delivery. To minimize the power consumption of the system, all the system components – primarily the controller, radio, and external circuitry –should consume the least amount of power.

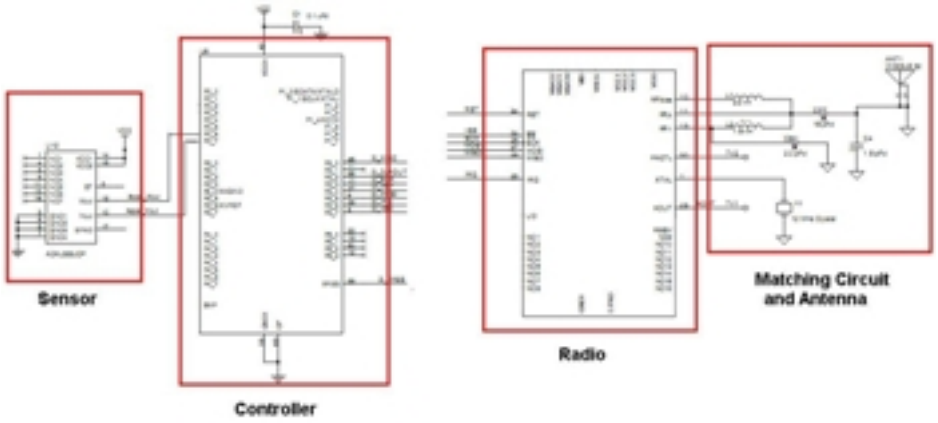

Fig 1. Typical schematic of the circuit showing of a wireless sensor node

Controller:
Power consumption of the controller depends mainly upon the efficiency of the controller. For a System-on-Chip (SoC), power consumption is based on the number of active resources at any particular instance. Important system parameters that affect battery life are the supply voltage, CPU speed, and the active and sleep time of the controller. Power consumption is reduced by turning off unused resources or putting them to sleep. Resources can be the controller itself or external peripherals and circuit elements. In the case of an SoC, individual analog and global resources can also be put to sleep.

Sleep current values are typically much less compared to active current values. Thus, when a system is not being used, it can be put into sleep during idle times so that the average current consumption is reduced. Typically, applications make use of a sleep timer and wake up the CPU at the data acquisition rate to collect data, transmit it, and go back to sleep. This is illustrated in the figure below.

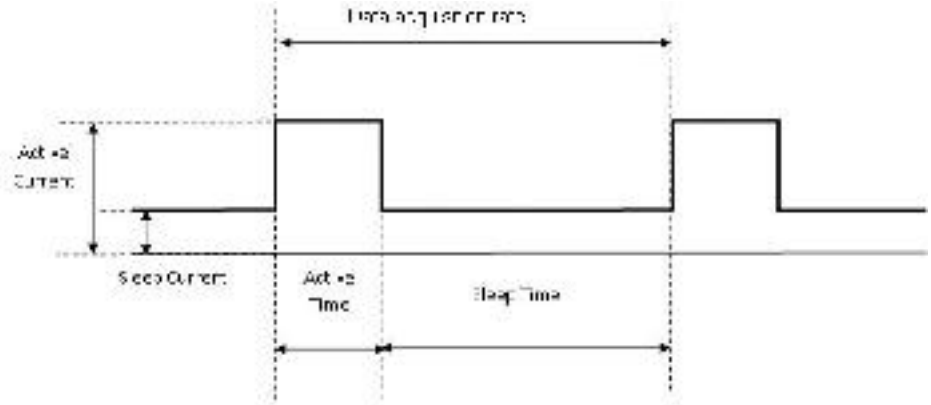

Fig 3: Current Consumption vs Time

Iaverage = (Iactive x Tactive + Isleep x Tsleep) / (Tactive + Tsleep)
The above equation shows how the average current, Iaverage, can be minimized to these requirements. The appropriate way to do that is minimize Iactive, Tactive, and Isleep while maximizing Tsleep.

Radio: The radio should support interrupt mode; i.e., whenever a packet is sent or received, an interrupt is triggered. In this way, the controller could be put in sleep mode until it is awakened to respond to incoming/outgoing data. Radios that support a DSSS (Direct Sequence Spread Spectrum) mode make use of PN (pseudo noise) codes which ensure reliable data delivery that is important in data critical applications. However, the use of long PN sequences reduces the effective data rate. DSSS will need a multiplier to be implemented, which in turn increases the power consumption of the radio. For power-critical applications, designers can choose radios which support GFSK (Gaussian Frequency Shift Keying) to send raw data and conserve battery power. Radios must also support sleep mode.

RF circuits often make use of power amplifiers (PA). PAs increase power consumption and hence are not often used in power-critical applications. A Dynamic Power Amplifier with discrete amplification levels, used in conjunction with DSSS, can optimize power for data-critical applications. For example, Cypress' CYRF6936 supports DSSS, GFSK, Dynamic PA, sleep mode, and is suitable for both power-critical and data-critical applications.

External Circuitry: Sensors, matching circuitry, and antennas form a part of the external circuitry in both power-critical and data-critical applications. Hence, these power considerations apply for both types of applications.

Sensor: In applications like a mouse where the signal rate is low and data delivery is critical, the sensor can be put into various levels of sleep, depending on periods of inactivity. Power efficiency is increased by at the expense of system responsivenss.

Matching circuitry and Antennas: For efficient transfer of energy, the impedance of the radio, the antenna, and the transmission line connecting the radio to the antenna must be the same. Typically, radios are designed for 50 ohm impedance and the coaxial cables (transmission lines) used with them also have a 50 ohm

impedance. Efficient antenna configurations, however, often have an impedance other than 50 ohm, so some sort of impedance matching circuitry is required. Use of low-loss components in matching circuits provide the maximum transfer of energy between the transmission line and the antenna.

Delay
In data-critical applications, delay is a critical design parameter. Delay is defined as the time taken to transfer a packet or time taken to perform an application data transfer like a file transfer. The average delay over various transfers is used as a metric to qualify the network. To minimize delay, packet losses should be avoided and the protocol should dynamically shift channels as the noise levels in the current communication channel increases. In this case, the data is transmitted at the maximum power to transmit reliable. The power is then reduced in steps as long as delay requirements are met.

Throughput
Throughput is dependent upon the number of packets dropped out. In case of single-hop systems in which wireless nodes communicate to a central hub, there is a dedicated link between the hub and all nodes, and packets may be dropped due to noise from other sources occupying the channel. As the RF signal power levels are small, noise of small amplitudes can also disturb the signal. DSSS and Gaussian filtering techniques help to optimize signal power.

To avoid losses, the protocol should dynamically shift across channels when throughput thresholds are not met. Throughput thresholds can be measured by continuous averaging of throughput. For example, say an application needs 100 RF packets to be transmitted per second and this is termed as one transfer. By monitoring the time after 50 packets transfer, if the throughput is less than threshold – it might be 40 packets/500ms – then the channel is changed. In the case of data-critical applications, the system maximizes throughput at the expense of power. For power-critical applications, power is optimized at the expense of throughput.

Protocol overhead needs to be minimal to guarantee efficient throughput. However, the use of a basic header even with just a sequence number is advised as such headers reduce packet losses at the expense of very little overhead. The throughput savings depends on whether the protocol handles data transfers on a hand shake basis, with an ACK, by using sequence numbers, or using piggy backing. For applications with critical data, sequence IDs and piggy backing techniques are recommended.

Security
RF data is secure if the PN codes used are unknown to nodes outside the network. For an extra level of security, data can be encoded by using simple XOR logic, generator polynomials, or the Advanced Encryption Standard (AES). If symbols are repetitive and follow a pattern, encoding can be used to compress the data. Security is advised for data-critical applications but not for power-critical applications.

Quality of Service (QoS)
QoS rates network quality based on parameters like delay and throughput. To guarantee a certain level of QoS, thresholds should be set based on these metrics and the protocol dynamically optimized for parameters like noise. For example, to reduce power consumption the PA can be dynamically modified by the protocol depending upon the noise floor and distance to the receptor. Power-critical applications are designed for QoS of power and data-critical applications are designed for QoS of delay.

When designing a power-critical application, the protocol needs to simple and small. More emphasis should focus on achieving more sleep time with Rx/Tx functions triggered by interrupts from the radio. For data/time-critical systems, the protocol should be more dynamic to sense changes in operating conditions and accordingly change parameters like the communication channel, PA, data rate, etc. to adjust power efficiency. Given that many real-life applications cannot be strictly classified into power-critical or data-critical applications, developer will need to select of blend of techniques to design an optimal system.

By Pushkar Nandkar and Balasatish Gurlinka, Applications Engineers, Cypress Semiconductor

Source URL (retrieved on *03/09/2014 - 8:26pm*):
http://www.wirelessdesignmag.com/blogs/2011/08/optimizing-rf-systems