New Test Methodology Simplifies Envelope Tracking Design in Mobile Devices

Lawrence Wilson, Product Manager Signal Generators and Power Meters, Rohde & Schwarz

The mobile communications industry is moving faster than ever to deliver the connected experience of video, voice, and data to the billions of people worldwide who are eager to consume it. The industry has seen the escalating use of smartphones and other mobile devices transform network traffic from mostly voice to a mix of integrated voice, video and data.

More smartphones in the hands of American consumers has resulted in the need to increase the bandwidth of mobile networks. Smartphone users demand fast Internet access and data transmission, which in turn requires new technologies and infrastructure advancements in order to handle the ever-increasing volume of data being transmitted.

The bulk of R&D efforts has been put into the advancement of wireless networks and the development of LTE/LTE Advanced baseband modem and transceiver chipsets. Key network technologies, including LTE/LTE Advanced and IMS, as well as technologies such as VoLTE, are fundamentally changing the game with their ability to increase data rates and deliver multimedia services and applications cost efficiently and with high quality.

The use of small cells, HetNets, DAS, and WiFi off-loading are also making a difference in improving capacity and coverage, which also contributes to an enhanced quality of experience. These new technologies have changed the way in which phones are used.They have enabled the mass expansion of cell phone usage by supporting new applications that require a significant amount of send/receive data, and the more data a phone transfers the shorter the battery life.

Modern communications standards, such as LTE and WCDMA, require specific power control of RF signals as they try and balance out quality of service against battery life. The goal is to transmit with just enough RF power to maintain a good quality link without using too much power, which can drain the battery. However, since the amplitude of the typical RF signal can vary quite significantly (or put another way, they have a high crest factor), the challenge is to set up the output transmitter stage of the mobile device to work efficiency over a wide range input amplitude levels.

One key element is the balancing of the RF power amplifer (PA) in the output stage of the mobile device to the power level of the single that is applied to it’s input. The traditional approach supplies the PA with a fixed supply voltage that operates most efficiently only when the RF signal is at, or close to, its maximum level. When the input RF signal is lower in amplitude, the PA is less efficient. The usage of RF signals

with high crest factors is going to continue, so to improve efficiency of the PA, a different approach is required.

As a result, RF engineers are redesigning PAs to increase system efficiency.

Envelope Tracking

Envelope tracking (ET) is a design method used to improve power amplifier efficiency, resulting in longer battery life and improved heat dissipation in mobile devices. The technique increases power amplifier efficiency by modulating the DC supply voltage with the envelope of the input signal. Because the power supply voltage applied to the power amplifier is constantly adjusted, the amplifier operates at peak performance for the given instantaneous input power requirements. Using shaping functions, the amplifier can be further optimized to tailor the performance of the PA to meet the specific design requirements.

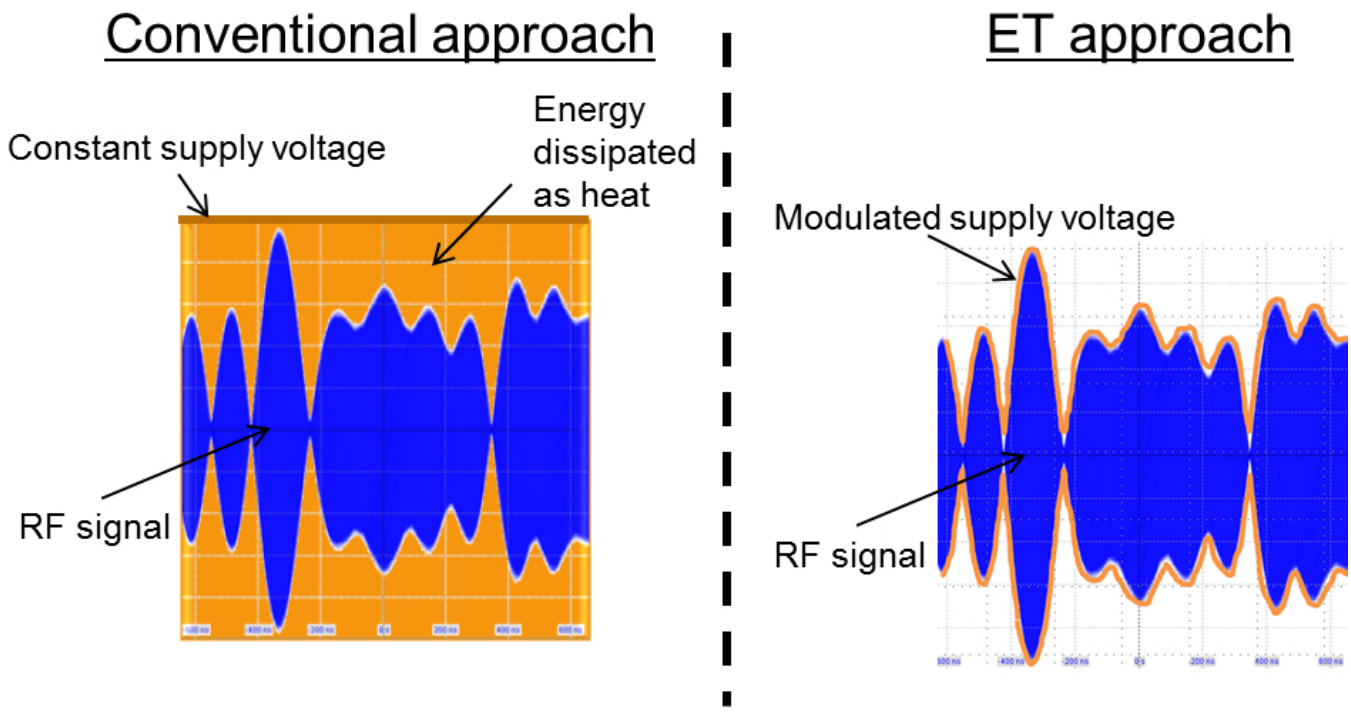

By driving a PA with a high bandwidth DC modulator, which supplies the voltage derived from the envelope of the RF signal, mobile devices can achieve significant improvements in efficiency and reduced power consumption.

Testing Envelope Tracking

Simulating, testing, and verifying an envelope tracking power amplifier can present a number of challenges. Typical test setups to measure power amplifiers consist minimally of a signal generator and a spectrum analyzer. Envelope tracking requires an additional generator to provide the envelope signal to the DC modulator. This demands precise adjusted time alignment between the RF signal and the envelope signal to ensure that modulator and the power amplifier are time aligned. Additionally, this approach limits the ability to make real-time adjustments, as any change to the RF signal requires a new envelope waveform be loaded into

the second generator. This can make the whole characterization of the ET-PA significantly more time consuming, as each time the RF signal is changed, a new envelope signal needs to be loaded.

To characterize the performance of the PA, the power added efficiency (PAE) needs to be analyzed, requiring time synchronous measurement of the PA's input and output power and corresponding power consumption. Precision synchronization is the key, which can represent a significant challenge when several test instruments are used. If synchronization is not achieved, inaccurate tracking of the signal amplitude causes distortion of the RF signal.

Since the timing between the envelope signal and the RF signal is crucial for a power amplifier, it is beneficial to deliver both signals simultaneously, preferably with a single instrument. A high-end vector signal generator has recently been developed that can create both RF and envelope signals — effectively replacing complex test setups. The Rohde & Schwarz R&S SMW200A vector signal generator, combined with the envelope tracking option, offers fast and simple power amplifier testing, including generation of the envelope tracking signals from a single signal generator. Providing both signals with one instrument eliminates the concern of signal synchronization. The R&S FSW signal and spectrum analyzer provides a single instrument analysis solution, which can simultaneously measure the RF and baseband signals, thus providing for instantaneous PAE measurements, as well as underlying modulation quality measurements such as EVM and ACLR.

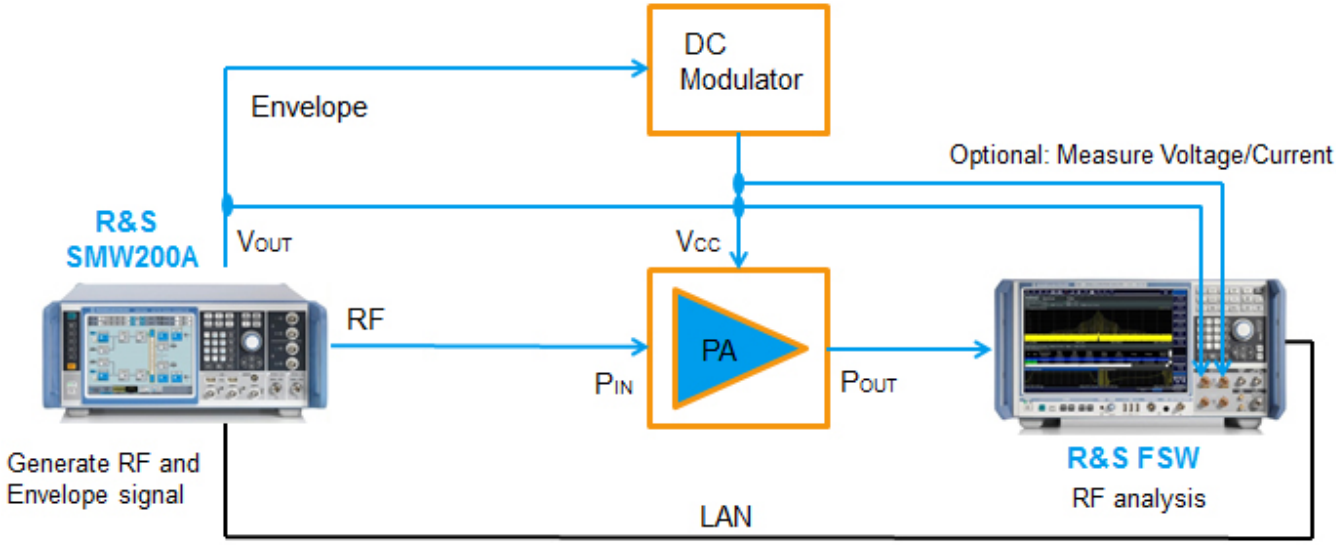

The envelope signal is generated from the baseband signal in real time, enabling any user-specific I/Q file or wireless communications standard, such as LTE or WCDMA, to be used. Generating the RF signal and the related envelope signal in a single instrument simplifies the test set up, reduces measurement error and speeds up testing by automatically generating the envelop signal in real-time. The vector signal generator adjusts the delay between the two signals in picosecond increments within a range of ±500 ns in real time, meeting tight specifications – e.g., less than 1 ns for a 20 MHz LTE signal. The voltage parameters of the envelope signal are completely changeable as well.

Combined with a high bandwidth for the envelope signal and spectral purity with a typical noise of only -155 dBc/Hz, the vector signal generator is well suited for RF and envelope signal generation. Since the RF and baseband envelope waveforms are generated within the same instrument, no extra cabling is needed to synchronize the two waveforms and no added jitter occurs, yielding 100 percent repeatability.

Shaping of the envelope signal is used to optimize the amplifier for efficiency or linearity. A large selection of flexible shaping functions, including table based approach for proprietary shaping techniques, and more generic capabilities like polynomial based shaping and detroughing. Together these enable users to optimize the shaping of the envelope in real time by automatically generating a new envelope signal each time a parameter is changed.

Matching the characteristics of the envelope signal to the DUT is simplified by enabling key parameters to be entered directly into the signal generator. Automatic envelope voltage adaptation automatically generates an envelope signal to match the limits of these key parameters (VCC voltage range, PA in range, DC modulator gain, DC offset and power offset). This makes it possible to perform power sweeps over the amplifier's entire input range as the signal generator will automatically calculate the appropriate envelope signal for each individual input power level.

A voltage or current probe can be used to sample the RF and envelope tracking signals concurrently. By adding a small known resistor in the circuit between the PA and the DC modulator, the current can also be calculated. Since the input and output powers of the amplifier are known from the signal generator and the spectrum analyzer, the PAE can be calculated.

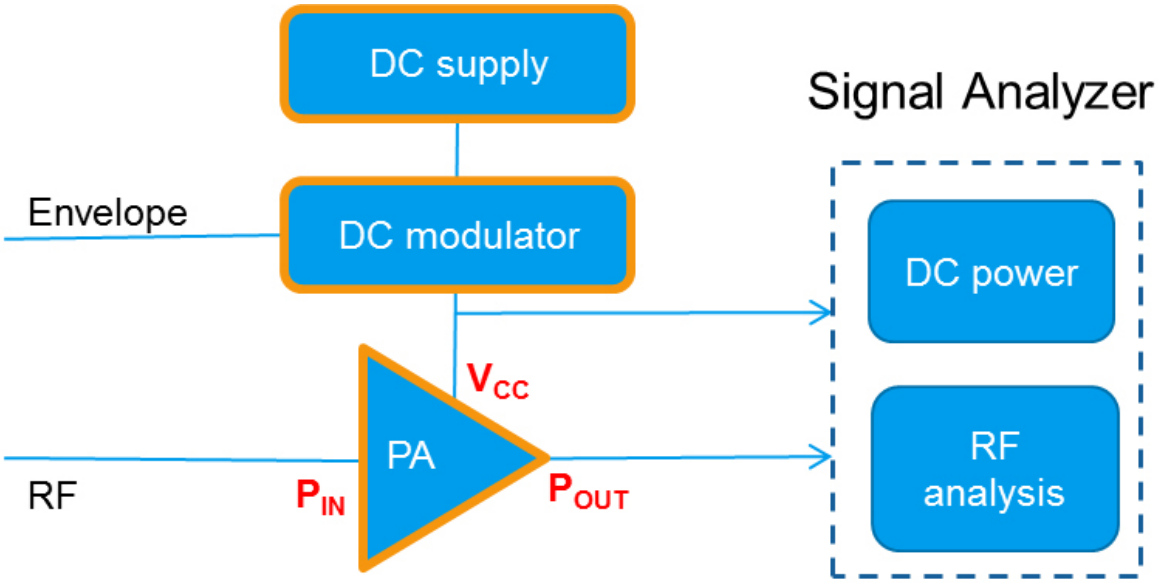

$$\mathbf{PAE} = \frac{\text{RF Power(out)} - \text{RF Power(in)}}{\text{DC Power}}\%$$

Digital Pre-Distortion

Digital pre-distortion is a technique used to improve the linearity of RF amplifiers, ensuring accurate, cleaner output signals. An amplifier that compresses the input signal or has a non-linear input/output relationship causes the output signal to interfere with adjacent radio frequencies and channels. The advanced vector signal generator pre-distorts current waveform in real-time with AM/AM and/or AM/PM, across all standards-based or user-defined waveforms. Envelope tracking can be created before or after digital pre-distortion is applied, and the digital pre-distortion can be used as a standalone option in systems that do not utilize envelope tracking.

Conclusion

Envelope tracking enhances the end-users Quality of Experience (QoE) by improving the battery life of the mobile device. With envelope tracking, the amplifier supply voltage is controlled in such a way that it tracks the envelope of the RF signal. As a result, the amplifier always operates in a range close to its instantaneous maximum output power, considerably boosting amplifier efficiency.

Previously, it was a significant challenge to synchronize the envelope and the RF waveform applied to the power amplifier. Recent advancements to test and measurement instrumentation has simplified envelope tracking and digital pre-distortion simulation, testing and verification. The advanced vector signal generator, combined with the signal and spectrum analyzer in a single instrument, delivers real time envelope shaping that automatically tunes and shapes the power amplifier signal for best efficiency or linearity. Envelope tracking performed in real time not only provides more accurate data, but delivers this information in less time, improving a customer's time-to-market.

For more information visit www.rohde-schwarz.us [1].

Source URL (retrieved on *09/01/2014 - 11:12pm*):
http://www.wirelessdesignmag.com/articles/2014/03/new-test-methodology-simplifies-envelope-tracking-design-mobile-devices

Links:
[1] http://www.rohde-schwarz.us