Three Terminal Filter Capacitors Simplify Designs, Reduce Component Counts

Ron Demcko, Application Engineering Manager at AVX Corp

It is worthwhile to take some time and look at the role a three terminal FeedThru capacitor filter can play in today's designs. Three terminal capacitors are now broadly accepted in designs ranging from satellites to cell phones, automobiles to SMART grid controllers. Further, their list of applications is growing rapidly as FeedThru capacitors evolve into smaller packages that can handle more current at higher temperatures.

These miniature devices act as a broadband filters and allow designers an exceptionally wide filter response across frequency spectrums typically 300 MHz wide. FeedThrus can be chosen for filtering frequencies starting as low as ~75 MHz or as high as many GHz.

FeedThru Description
FeedThru filters can be either a single three-terminal device, or a 4 element array, ten terminal device as shown in the figure. FeedThrus filters have an input and output and two center-tap ground terminals midway along the body. They are many times called an LC T filter though the series inductance is achieved through non-ferrous materials. They are commonly made out of NPO, X5R and X7R dielectrics with termination options that are either RoHs or SnPb for commercial and military/SCD applications.

Recently AEC Q200 qualified FeedThrus were introduced to address strict EMI concerns of drive by wire automotive systems. As auto usage expands so will the need for 150°C rated FeedThrus. Additionally, high reliability FeedThrus are used in a variety of spacecraft because of their dramatic size and weight reduction that they offer on a systems level.

FeedThru Advantages
FeedThru filters can replace the various value capacitors placed in parallel on Vcc lines. Designers sometimes use multiple capacitance values whose combined frequency responses create a broadband filtering effect. The problem with that approach is that the effective parallel inductance of the various capacitors is still quite high relative to FeedThru filters parallel inductance. Also there are series

inductances due to traces and pads that tend to affect the combined frequency of all the capacitors. Is not uncommon to replace at least two of the parallel capacitors (possibly three depending upon the frequency range) with a FeedThru filter. Replacing three parts with one improves reliability; simplifies layout and routing; decreases weight, size and assembly cost; and can also increase electrical efficiency.

It is also possible to replace some discrete LC T filters with a single FeedThru. In this case, the FeedThru still offers the previously stated physical advantages along with electrical ones of a frequency response that tends to be mode repeatable than LC T filters and quite stable over temperature.

FeedThru Filter Features

FeedThru Filters are attractive to use not only because of their small size and light weight, but also because of their high reliability, simplicity of implementation, and low cost. The most common FeedThru case sizes used today are 0805 and 1206. Smaller case sizes of 0603 and now 0402 are emerging as well a larger high power 1812 case sizes. The most popular values within the 0805 and 1206 case size FeedThrus are shown in Figure 1 along with the equivalent model for FeedThru filter being shown in figure 2. The table illustrated that capacitor manufacturers strive to minimize the series resistance of the FeedThru while attempting to maximize series inductance. Likewise capacitor manufacturers work to tightly control the parallel resistance and reduce the parallel inductance.

Nom Cap (pF)	**Nom Volt**	**FDR (milli-ohms) "SR1 + SR2"**	**ESR (milli -ohms) "PR1"**	**ESL (pH) "PL1"**	**Fr (MHz.)**
10	100v	1289.1	341.4	71.6	5,946
22	100v	652.5	167.8	75.6	3,903
33	100v	459.8	116.4	77.7	3,144
47	100v	338.8	84.7	79.5	2,603
100	100v	176.5	42.9	83.7	1,740
220	100v	89.4	21.1	88.3	1,142
330	100v	63.0	14.6	90.7	920
470	100v	46.4	10.6	92.9	762

1,000	50 v	65.5	141.0	58.2	660
10,000	50 v	27.0	37.8	75.2	184
22,000	50 v	89.3	28.6	72.9	126
33,000	50 v	81.7	22.3	73.9	102
47,000	50 v	75.6	17.9	74.8	85
68,000	50 v	69.7	14.3	75.8	70
100,000	50 v	64.1	11.2	76.8	57

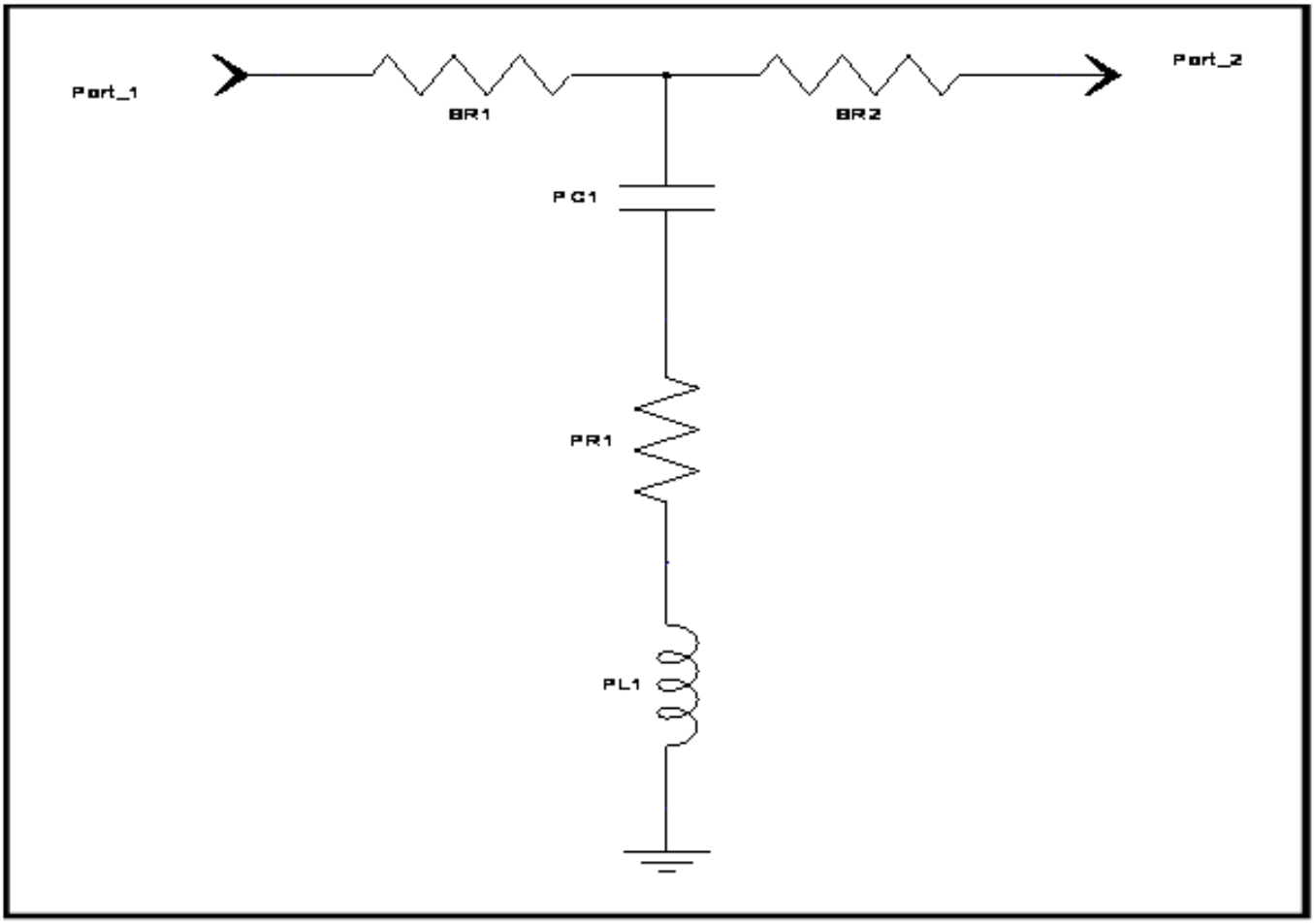

The use of FeedThru filters on a printed circuit board (PCB) greatly reduces board area, and actually improves EMI filter efficiency. Examples of the filtering responses available within both 0805 and 1206 case size filters are shown in the forward

transmission loss characteristics (S21) graphs below. Figure 3 for an 0805 case size filter series rated at 100V figure 4 is a 1206 rated at 50V. The enhanced frequency response is a result of the series inductance being maximized and the parallel inductance being minimized.

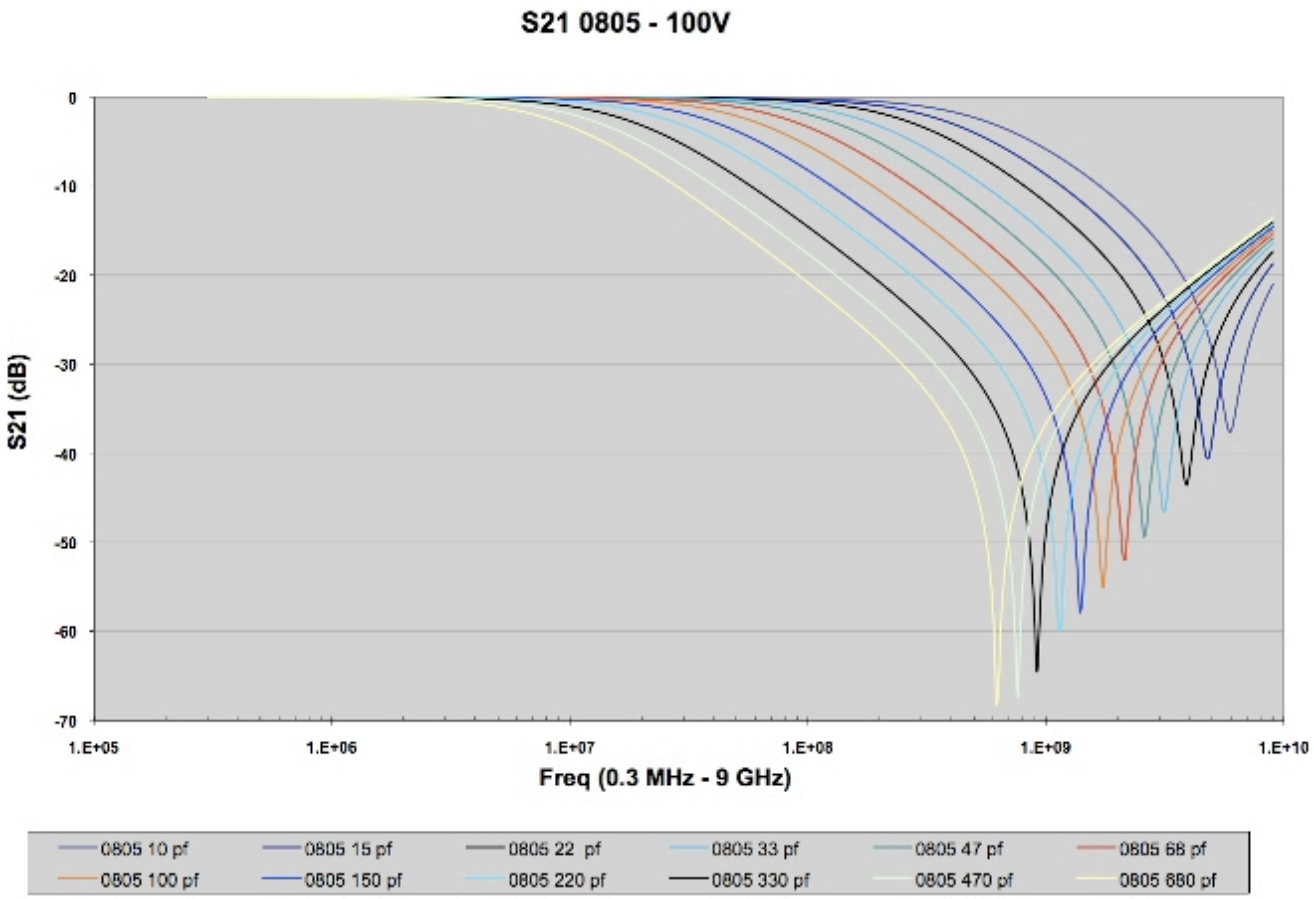

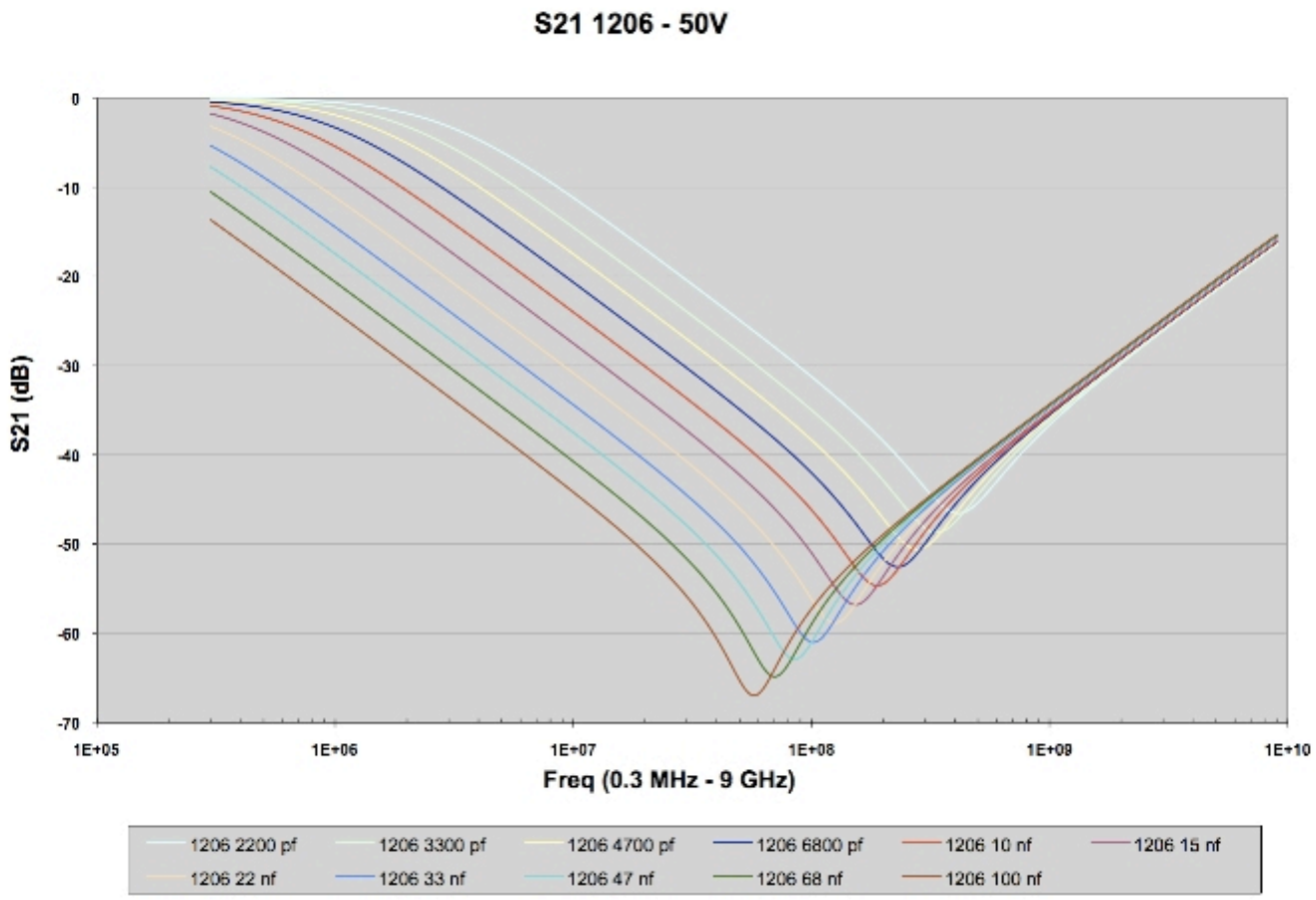

FeedThru filters are a simple, low cost way to provide broadband filtering with a single component. The trend and capability is for larger values of parallel capacitance to be integrated in order to make FeedThrus more applicable to low frequency filtering. The current rating of FeedThru filters is also increasing both within a case size and with the introduction of larger case sizes. In addition, high temperature versions of FeedThru filters are emerging to meet the requirements of various underhood applications.

Source URL (retrieved on *09/01/2014 - 8:10am*):
http://www.wirelessdesignmag.com/articles/2011/07/three-terminal-filter-capacitors-simplify-designs-reduce-component-counts?qt-most_popular=0&qt-digital_editions=0