RF Envelope Detection Enables Drain Modulation Systems

By Eamon Nash and Ashraf Elghamrawi, RF Group, Analog Devices, Inc.

Improving the Power Added Efficiency (PAE) of High Powered Amplifiers continues to be a challenging goal in a Wireless equipment industry that is struggling to deliver cheaper, smaller equipment that consumes either less electricity or in the case of portable devices, less battery current. An array of techniques is currently being researched. In most cases the commercialization of any technique will depend on the development of breakthrough technology. This article will focus on some of the techniques being used to improve PAE and some of the RF signal processing blocks that are enabling this technology.

Peak-to-Average Ratio

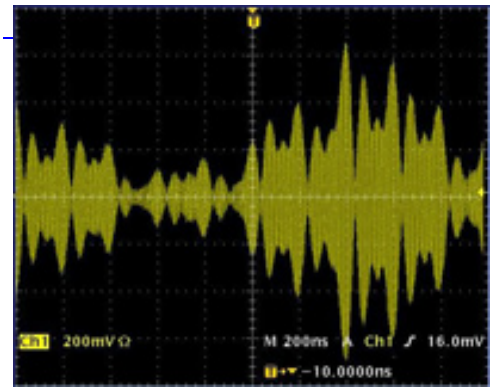

[1]

Figure 1 shows the time envelope of a 20 MHz wide Orthogonal Frequency Division Multiplexed (OFDM) signal. The signal is composed of a large number of orthogonal QAM modulated sub-carriers running at relatively low symbol rates. OFDM based wireless transmission is becoming increasingly popular partially due to the relative immunity of the low symbol rate sub-carriers to fading. It is currently used in Wireless LAN and WiMax systems and will also be used in the next generation Long Term Evolution (LTE) mobile data and voice system. Advanced OFDM systems allow for the modulation of the sub carriers to be changed based on operating and environmental conditions. For example, if a subscriber is at the edge of a cell, the system may decided to modulated the sub-carriers using Quadrature Phase Shift Keying which requires a relatively low Signal-to-Noise ratio to be successfully demodulated. This comes at the cost of a relatively low data rate. On the other hand, if the subscriber is close to the center of a cell and is in need of a high data rate, higher order modulation sub-carriers can be transmitted which bring with them a higher data rate.

Because higher order QAM signals such as 64-QAM and 128-QAM have high peak-to-average ratios, the peak-to-average ratio of an OFDM signal, which can easily be composed of 1024 sub carriers, will also be high. This is clearly apparent from Figure 1. From Figure 1, we can also see that the signal also experiences deep troughs. So while it is common to talk about peak-to-average ratio, we will see later that the signal's Peak-to-Minimum ratio which can be in the 40 dB range may also be of significance when trying to design more efficient power amplifiers.

Figure 2 shows a very basic block diagram of a power amplification system. The current that is delivered to the load emanates from the High Power Amplifier's (HPA) power supply, ±4V in this case. The output signal has both an rms (VRMS) and a peak level (VPEAK). For good signal fidelity, there must be enough head-room between the output signal and the power supply such that signal peaks are not clipped.

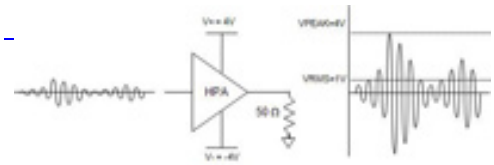

[2]

Because of this headroom requirement, there is a fundamental weakness or inefficiency to this system. If the signal has a high peak to average ratio, the power supply must be biased to accommodate the peaks and not the rms level.

Imagine that the output rms level is 1Vrms and that the signal has a peak to average of 4, that is, 12 dB. This means that the signal will have peaks of 4 V and a peak-to-peak swing of 8 V. This implies that the absolute minimum power supply voltage to the system can be ±4 V (or 8 V in a single supply system.) The power being delivered to the load is equal to 20 mW (1 V x 1 V/50) and the load current is equal to 20 mA. However, the power delivered by the power supply is equal 80 mW (4 V x 20 mA). This corresponds to an efficiency of 25 %. (100 x (20 mW/80 mW)).

While the example above does not really represent a practical system, it does serve to illustrate how the transmission of high peak-to-average ratio signals naturally degrades the efficiency of the power amplification system.

Drain Modulation

Figure 3 shows an alternative power amplification scheme that tries to mitigate the headroom issue described above. The input signal, in this case, is split into two branches. On one branch, the signal is limited, that is, it is amplified to a saturated state with its phase information intact. On the second branch, the signal is applied to an envelope detector. The output of the envelope detector is then used to modulate the power supply for the PA. This ensures that the bias voltage to the PA

is only high when it needs to be high and can result in significant saving of standing power and increased efficiency.

Click to enlarge:

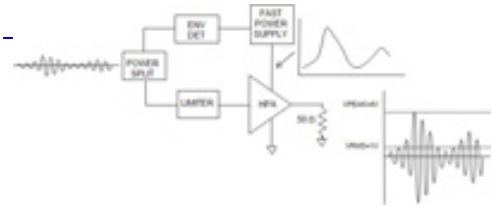

[3]

Implementing such a system which is often referred to as Envelope Elimination and Restoration (EER) or Drain Modulation (where “Drain” refers to the drain of a power FET transistor) is not easy, with the toughest challenges being in the envelope path. A carrier with a bandwidth of 20 MHz has an envelope bandwidth also of 20 MHz. This means that the envelope detector and the PA power supply must have bandwidths that are at least as fast and probably considerably faster than 20 MHz to avoid phase delays. This is particularly challenging for power supplies that need to deliver tens or hundreds of watts. To date Drain Modulation has primarily been implemented on narrow band systems such as single-carrier GSM-EDGE handset transmission where bandwidths of hundreds of kilohertz are adequate.

Recent advances in Envelope Detection technology will help to make this architecture a practical reality. Figure 4 shows the block diagram of the Analog Devices ADL5511, a newly announced TruPWR™ RMS and Envelope detector.

The ADL5511 provides two separate outputs from one RF input. The voltage on VRMS corresponds to the RMS voltage of the input signal (scaled by a factor of three). The voltage on the VENV pin corresponds to the envelope of the input signal. The VENV output is referenced to the fixed 1.1 V voltage available on the EREF output. Referencing the envelope output voltage to a non-zero value ensures that the net envelope voltage (VENV-VEREF) can swing all the way to 0 V with low offset voltage errors.

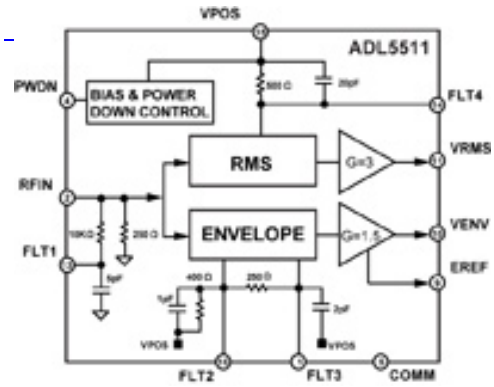

[4]

The ADL5511 can accept input power levels from -25 dBm to +15 dBm, that is, a dynamic range of 40 dB. The RMS and envelope outputs are accurate over temperature to within ± 0.25 dB. The detector also operates across a wide input frequency range of 1 MHz to 4 GHz, without the need for an external balun or external reactive matching.

The envelope delay through the ADL5511 has been minimized to less than 5 nS. This keeps the signal to be transmitted and the drain modulation envelope closely in sync, without the need for long delay lines.

In addition to drain modulation the PA designer can also use the VRMS and VENV outputs to calculate the peak-to-average ratio of the input signal through the use of an external peak hold op-amp circuit. Alternatively, the Analog Devices ADL5502 rms and envelope detector, which incorporates an internal peak hold circuit can be used for peak-to-average measurements.

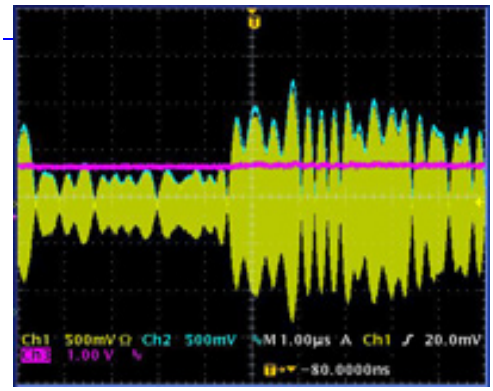

[5]

Figure 5 shows the response of the ADL5511's rms and envelope outputs to a single Wideband Code Division Multiple Access (WCDMA) carrier. The yellow solid trace represents the WCDMA carrier. The blue trace shows the device's VENV output. With a chip rate of 3.84 MHz, the WCDMA signal has a carrier bandwidth also of 3.84 MHz. Since the ADL5511 envelope output has a bandwidth of approximately 80 MHz, the VENV output can accurately follow the fast changing envelope. In addition, the detector's 40 dB detection range (on both the rms and envelope outputs) ensures that both signal peaks and troughs are captured.

Figure 5 also shows a straight trace (pink) which represents the rms voltage of the input signal (scaled by a factor of 1.5). This output signal has been heavily averaged by the rms averaging capacitor (1 µF) which is connected to the FLT4 pin. While this capacitance dramatically slows down the response time of the rms output, it has no effect on the response of the envelope output.

Conclusion

With a fast envelope bandwidth and 40 dB of signal detection range, the ADL5511 can help to facilitate all-analog Drain Modulation schemes, that is, systems where

the envelope signal that drives the fast switching power supply is generated from the original modulated carrier. In such schemes the additional rms output may be of value in scaling the final output power level.

Eamon Nash is an applications engineer, RF Group, Analog Devices. Ashraf Elghamrawi is a marketing engineer, RF Group, Analog Devices, http://www.analog.com [6]

Source URL (retrieved on *09/21/2014 - 8:48pm*):
http://www.wirelessdesignmag.com/articles/2011/02/rf-envelope-detection-enables-drain-modulation-systems?qt-digital_editions=0&qt-blogs=0

Links:
[1] http://www.wirelessdesignmag.com/sites/wirelessdesignmag.com/files/legacyimages/1102/ADI_Fig1_lrg.jpg
[2] http://www.wirelessdesignmag.com/sites/wirelessdesignmag.com/files/legacyimages/1102/ADI_Fig2_lrg.jpg
[3] http://www.wirelessdesignmag.com/sites/wirelessdesignmag.com/files/legacyimages/1102/ADI_Fig3_lrg.jpg
[4] http://www.wirelessdesignmag.com/sites/wirelessdesignmag.com/files/legacyimages/1102/ADI_Fig4_lrg.jpg
[5] http://www.wirelessdesignmag.com/sites/wirelessdesignmag.com/files/legacyimages/1102/ADI_Fig5_lrg.jpg
[6] http://www.analog.com