Solutions for Nonlinear Characterization of High-Power Amplifiers

By Keith Anderson, Agilent Technologies

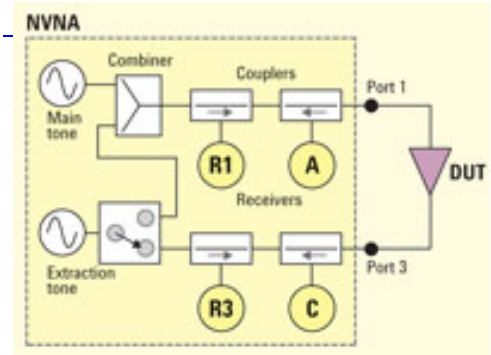

[1]

High-power RF amplifiers are used in telecommunications, biomedical, and military systems. With output power levels ranging up to 1kW, these amplifiers are typically designed to operate near or into compression in order to provide the maximum output power possible. This may result in the generation of harmonics, intermodulation distortion, and gain compression which are often undesirable byproducts. As a result, designing high-power amplifiers requires a detailed analysis of their nonlinear behavior.

In the past, when designing systems with high-power amplifiers, the designer would measure the S-parameters of the amplifier using a vector network analyzer (VNA), load the results into an RF simulator, add other measured or modeled circuit elements, and then run a simulation to predict system performance such as gain and loading effects. Since S-parameters assume that all elements in the system are linear, this approach does not work well for characterizing the nonlinear behavior of devices such as high-power amplifiers. The errors are particularly apparent if we measure the S-parameters of two devices that exhibit nonlinear behavior, simulate the cascade of those devices, and then compare the result to an actual measurement of the two cascaded devices.

The Nonlinear Vector Network Analyzer

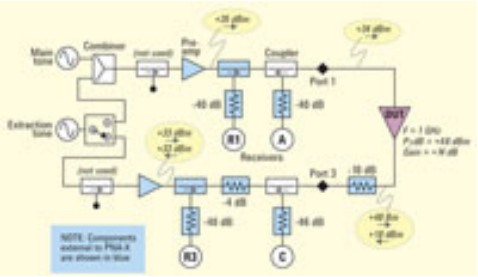

[2]

In order to characterize nonlinear devices, Agilent’s VNA has evolved into a modern nonlinear vector network analyzer (NVNA). The NVNA may be used to measure the nonlinear characteristics of a high-power amplifier, expressed as a set of X-parameters*. Unlike S-parameters, these X-parameters may be used by an RF simulator to accurately simulate the performance of a system containing nonlinear elements.

An NVNA is similar to a standard network analyzer; however it can stimulate the device under test (DUT) with two RF sources rather than one (see Figure 1). For X-parameter measurements, the first source provides a main tone which is used to drive the DUT at its normal frequencies and power levels, whereas the second source provides an extraction tone which is used to measure the small-signal performance of the DUT. During a typical measurement sequence, the main tone will be set to multiple frequencies and power levels while the extraction tone will be set to harmonics of the main tone and applied to either the input and output of the DUT. The DUT's input and output waves will be measured under these conditions and the X-parameters are generated from these measurements.

Typically, measuring a high-power amplifier with an NVNA will require some instrument modifications. High power levels may damage the network analyzer. In addition, the source output power, internal path losses, receiver compression, and receiver noise floor should also be considered when choosing a high-power setup. It is essential that the NVNA test set includes direct access to its internal receivers so that the high-power modifications are possible.

The setup in Figure 2 is designed to measure a 1 GHz amplifier with +14 dB gain and +48 dBm output power using an Agilent PNA-X network analyzer, Model N5242A (Options 423 and H85). The setup requires the addition of two pre-amplifiers, two couplers, and six attenuators (shown in blue).

Input Port Modifications

The NVNA port 1, which is connected to the input-side of the DUT, was modified by adding a pre-amplifier, a coupler and two attenuators to the RF test set.

A +35 dBm pre-amplifier was added to provide +34 dBm input to the DUT; this assumes that the two couplers have a combined loss of -1 dB. The pre-amplifier was added behind the reference and test couplers so that its drift and mismatch errors

are removed after error correction. As a general rule-of-thumb, the distortion generated by the pre-amplifier should be -20 dBc or lower to avoid stimulating nonlinear behavior in the DUT which cannot be corrected by the NVNA. The pre-amplifier should be rated to handle an open or short circuit condition at +35 dBm output in case the DUT is disconnected.

The internal reference coupler was replaced with a high-power external coupler. For a +35 dBm output drive level from the pre-amp into an open circuit, the standing wave at the coupler input may be +40 dBm. Since the internal reference coupler has a damage level of +30 dBm, it is necessary to replace it with an external coupler rated for +40 dBm. Note that the test coupler was not replaced because it has a damage level of +43 dBm.

Two external -40 dB attenuators were inserted in front of the receivers. Assuming a maximum power level of +35 dBm at the coupler and a -15dBc coupling factor in the coupler, this limits the receiver input power level to -20 dBm. As a general rule-of-thumb, the receiver input should be kept below -20 dBm to minimize distortion products generated in the receiver.

Output Port Modifications

The NVNA port 3, which is connected to the output-side of the DUT, was modified by adding a pre-amplifier, a coupler and four attenuators to the RF test set.

A +33dBm pre-amplifier was added to provide a +18dBm extraction tone level into the DUT output (after accounting for the -4 dB attenuator, -10 dB attenuator, and -1 dB loss through the couplers). This extraction tone level is -30 dB below the maximum DUT output power of +48 dBm. As a general rule-of-thumb we would like to keep the extraction tone level between -20 dB and -40 dB below the main tone level; a larger extraction tone will result in less noise. The pre-amplifier was added behind the reference and test couplers so that its drift and mismatch errors are removed after error correction. It is interesting to note that any distortion products generated in this pre-amplifier will always be small compared to the main tone power level. Therefore, any distortion generated by the pre-amplifier will be measured and corrected in the X-parameters. The pre-amplifier should be rated to handle an open or short-circuit condition at +33 dBm since the DUT may drive a +33 dBm signal into its output, appearing as an open or short.

The internal reference coupler was replaced with a high-power external coupler. For a +33 dBm output drive level from the pre-amp into a maximum DUT output drive level, the standing wave at the coupler input may be +39 dBm. Since the internal reference coupler has a damage level of +30dBm, it is necessary to replace it with an external coupler rated for +39 dBm. Note that the test coupler was not replaced because it has a damage level of +43dBm.

The -40 dB and -46 dB attenuators were inserted in front of the receivers to limit the receiver power levels to below -20 dBm and therefore minimize distortion products in the receiver, similar to the NVNA port 1 modifications.

The -4 dB and -10 dB attenuators were added to the main RF path to limit the maximum power level incident on the pre-amplifier output to +33 dBm. This occurs at +48 dBm DUT output, assuming that the couplers have a combined loss of -1 dB. Under this condition, the pre-amplifier may experience an open or short-circuit condition since its output level is +33 dBm. The -10 dB attenuator is placed between the test coupler and DUT output to limit the power at the test coupler to +38 dBm, which is well below its +43 dBm damage level. Adding this -10 dB attenuator protects the couplers and improves the load match of the test port, but it also reduces the raw directivity of the test port by -20 dB, resulting in less calibration stability. It is best to minimize this attenuator to improve stability, but as a general rule-of-thumb, up to -10 dB of attenuation is usually acceptable.

Cautionary Notes

By their very nature, high-power measurement setups require very careful consideration of many system details. Mistakes in the test setup may result in measurement errors, or in the worst case it could damage the DUT or the test equipment. Here are some important considerations:

•Know and respect the maximum RF and DC levels of the system components. Be aware that some NVNA ports cannot withstand any DC voltage.

•The RF power applied to the PNA-X ports should be at least -3 dB below the RF damage levels of those ports and should ideally be at least -6 dB lower.

•When calculating the maximum power level at a given point in the test setup, make sure to use the worst-case sum of voltages. For example, if two 0 dBm signals combine together at the same frequency, the maximum signal level will be equivalent to +6 dBm worst case.

•The DUT and pre-amplifiers may have specific input and output load match requirements which must be met before being powered-up to avoid oscillation or damage. Beware of open-circuit conditions.

•The DUT and pre-amplifiers may be sensitive to power-on sequencing. Make sure that you know your pre-amplifier and DUT requirements before turning on the system.

•Keep RF cables short and use semi-rigid cables where possible to ensure measurement stability.

•Presetting the NVNA may result in the power being set to a level which may damage the NVNA or DUT. It is usually best to enable the "user preset" condition which allows the user to define the power level at preset.

Conclusion

Most high-power amplifiers are designed to operate in the nonlinear region. A nonlinear vector network analyzer (NVNA) is the ideal tool to characterize and model such a device. By modifying the RF test set of the NVNA, amplifiers operating at power levels up to 1kW can be measured. These modifications include adding external attenuators, couplers and pre-amplifiers at strategic points within the test set. High-power setups and measurements such as these require special care and attention to detail on the part of the test engineer to avoid damaging the device under test and the test system. For more information on this topic download the 30-page application note, "High Power Amplifier Measurements Using Agilent's Nonlinear Vector Network Analyzer" at www.agilent.com/find/pnaxapps, or go to www.agilent.com/find/nvna.

*X-parameters is a registered trademark of Agilent Technologies. The X-parameter format and underlying equations are open and documented. For more information, visit http://www.agilent.com/find/eesof-x-parameters-info

Keith Anderson is a Senior R&D Engineer/Scientist of Agilent Technologies' Component Test Division, part of Agilent's Electronic Measurement Group.

Source URL (retrieved on *07/14/2014 - 2:46am*):
http://www.wirelessdesignmag.com/articles/2010/04/solutions-nonlinear-characterization-high-power-amplifiers?qt-most_popular=0

Links:
[1] http://www.wirelessdesignmag.com/sites/wirelessdesignmag.com/files/legacyimages/1004/wd1004_Agilent_Figure1_lrg.jpg
[2] http://www.wirelessdesignmag.com/sites/wirelessdesignmag.com/files/legacyimages/1004/wd1004_Agilent_Figure2_lrg.jpg