Challenges of LTE Basestation and Handset Testing

With the pressure on infrastructure equipment vendors to deliver quickly to market, structured, incremental and flexible test programs are essential for the development integration, verification and optimization of LTE infrastructure.

By Phil Medd and Nick Carter of Aeroflex Test Solutions

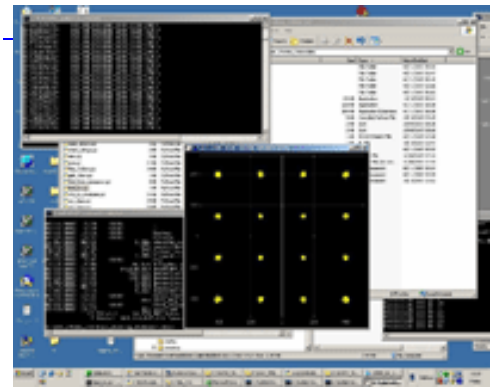

[1]

With all the major operators worldwide committing to 3GPP Long Term Evolution (LTE) as the mobile broadband technology of choice for their next-generation networks, LTE has emerged as a truly global phenomenon. Operators' equally aggressive LTE technology demonstration and roll-out plans and the need for the early availability of robust test systems becomes paramount. This is especially true as LTE represents a significant radio access technology shift, the realization and deployment of which is a major challenge. The test requirement arises across the entire LTE equipment supply chain from components to end-user services including basestations and handsets. Not only is there a need for test equipment to support the Frequency Division Duplex (LTE-FDD) version of LTE as the natural evolution for GSM/UMTS networks but also Time Division Duplex (TD-LTE), as TD-SCDMA technology seeks an LTE migration path under the stewardship of China Mobile. With CDMA-based network operators also announcing plans to migrate to LTE, there is strong interest in the internetworking of LTE with multiple "current generation" wireless technologies.

So why is LTE a testing challenge? High performance, wide bandwidths, high data rates, fast response times (reduced latency), more complex antenna configurations all combine to present greater challenges to the development of next generation basestations and devices. In order to support roaming on to other radio access technologies, such as TD-SCDMA, CDMA2000 technologies in addition to GSM/UMTS, multiple radio standards will need to be supported, especially with the lack of voice

support in early LTE networks. A further challenge is to maintain data throughput rates at cell edges, where SNR is usually worst, and also in crowded cell conditions. LTE will deliver peak data rates of 300 Mbps in the downlink and up to 75Mbps in the uplink. It is essential, therefore, that both receiver and transmitter performance are optimized, making the best use of the available signal in a noisy environment.

For much of the world, LTE devices will need to be backed up with GSM/GPRS, WCDMA/HSPA and/or CDMA2000/1xEVDO support in a range of frequency bands, with downlink frequencies potentially ranging from 746MHz to 2.69GHz (Ref: 3GPP TS 36.101). Initial certification of LTE devices is expected to be in Bands 1 (2100 MHz), 7 (2.6 GHz) and 13 (760 MHz) for FDD mode and Bands 38 (2.6 GHz) and 40 (2.4 GHz) for TDD mode. The WRC-07 conference allocated further spectrum for mobile use, meaning both lower (down to 450 MHz) and higher frequencies (up to 3.6 GHz) are likely to be seen as LTE rolls out over the next five years.

Challenges of LTE Basestation Testing

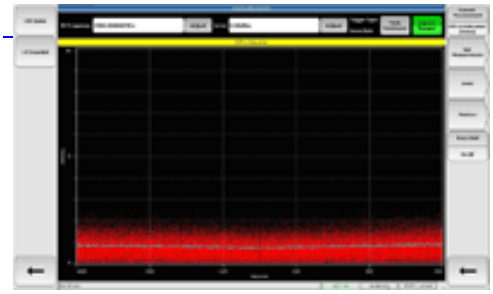

[2]

From an infrastructure perspective, the LTE E-UTRAN specifications also include an evolution of the underlying core network in a development known as System Architecture Evolution (SAE). The LTE/SAE specifications define a new radio interface as well as a simplified, optimized, all-IP core network. These provide a higher level of spectral efficiency and flexibility, higher numbers of users per cell and lower per-Mbyte cost. The LTE/SAE network architecture will also accommodate the co-existence and interoperation with other radio access technologies including GERAN/UTRAN and even WiMAX.

The LTE SAE therefore enables some re-use of legacy infrastructure in the core network. However, the 3G LTE E-UTRAN air interface specifies a range of new features and concepts, thus requiring a significant development program. Consequently, it is important to gain early validation of the key enabling features of the new specification through testing. These include MIMO, fast, low latency HARQ procedures, high-order modulation schemes up to 64QAM and the broad set of combinations/configurations of RF bands and channel bandwidths to provide the spectrum flexibility. Establishing the fundamental building blocks early on will provide solid foundations to enable LTE test and validation to quickly proceed up to system level.

The LTE SAE requirements to simplify the overall network architecture by moving to an IP-based network and reducing packet latency lead to important differences

between the LTE SAE and the UMTS Radio Access Network architecture. UTRAN employs relatively ‘dumb’ physical layer radio basestations, called NodeBs. These connect in a star topology into Radio Network Controllers (RNCs) which carry out the management of the radio resource and connect in turn to the Core Network. By contrast, in the simplified LTE system architecture the RNC has been removed completely with the consequence that the radio resource management is devolved into the basestations (called eNodeBs or eNBs). These eNBs connect directly into the core network gateway via a newly defined “S1 interface”. eNBs can also interconnect to adjacent eNBs in a mesh via the “X2 interface”. In addition to the new Layer 1 and Layer 2 functionality, eNBs will also handle radio resource control including admission control, load balancing and radio mobility control (UE handover decisions). The high level of functionality and performance required from an eNB basestation make it a complex and critical entity in the LTE architecture.

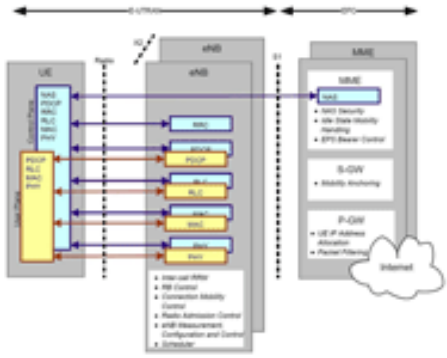

[3]

With the pressure on infrastructure equipment vendors to deliver quickly to market, structured, incremental and flexible test programs are essential for the development integration, verification and optimization of LTE infrastructure. But the reality of cellular network evolution is that infrastructure roll-out precedes that of the handset User Equipment (UE). So, without a UE, how do you test a basestation? The answer lies in the use of test mobile technology, such as the Aeroflex TM500 LTE (see Figure 1). The TM500 LTE provides low level UE control and configuration flexibility, combined with the detailed measurement data required by infrastructure engineers to rapidly diagnose engineering issues.

Importantly, the test mobile is being used both in the lab and over the air to demonstrate ‘real world’ LTE use in technology trials. However, testing against a single mobile is only part of the story. Basestation and core network designs need to be stressed and optimized against larger numbers of UEs. Aeroflex’s TM500 LTE Multi-UE solutions enable validation of many UE in complex scheduler, load and capacity tests early in the design cycle to ensure that robust, flexible and high performance solutions are delivered to network operators.

Challenges of LTE handset testing

Looking at UE-side testing, there are a number of key performance measurements that need to be made with regard to LTE handsets. Some of these are familiar from previous technologies, for example maximum output power, power control and

receiver sensitivity, but due to LTE's use of the OFDMA transmission scheme in the downlink and SC-FDMA in the uplink, new measurement concepts are needed to support the necessary tests.

To meet the LTE handset test challenge, a digital radio test set needs to integrate all the major functions in a bench-top instrument to enable comprehensive testing during the R&D stages of new devices. The Aeroflex 7100, for example, simulates the radio and core networks and provides all the key measurements for characterizing the performance of LTE mobile devices, both at the radio interface and throughout the protocol stack, including the PCDP and IMS layers. End-to-end performance can be accurately assessed, along with correct idle mode and connected mode behavior.

With OFDMA, for example, EVM per sub-carrier becomes an essential test of modulator performance. As the modulation bandwidth becomes a higher percentage of the centre frequency, this can pose a challenge with some modulator architectures. As a result, the EVM can be seen to rise at the band edges. There are six channel bandwidth allocations specified for LTE operation (1.4 MHz, 3 MHz, 5 MHz, 10 MHz, 15 MHz and 20 MHz) and it is necessary to measure the occupied bandwidth to ensure that the transmitter output remains within the channel bandwidth for all channel allocations (see Figure 2). The same applies to measurement of ACLR to ensure the interference between devices using adjacent frequency allocations is kept within specification.

Due to the dynamic nature of some of the tests, for example power control, the measurement conditions need to be established using the signaling protocol, making it essential that the test equipment includes the protocol stack, simulating the eNB basestation. To enable engineers to focus properly on the RF measurements being made, the test instrument should ideally incorporate a signaling protocol that operates automatically with user-definable parameters such as channel number.

Although the LTE physical layer uses a cyclic prefix to add resistance to multipath effects, this needs to be tested to ensure correct operation. A baseband fading option will facilitate this, enabling the impact of multipath fading on the end-to-end throughput to be assessed. This allows a real-world view of the behaviour of the device in the field to be seen in the lab, before field trials are conducted. The incorporation of a 3GPP Rel-8 compliant protocol stack and physical layer will allow emulation of an eNB and the Evolved Packet Core (EPC) network. An integrated IMS server allows complete functional testing to be performed, allowing end-to-end throughput and latency to be measured in a controlled environment.

In terms of the protocol stack, one of the principal challenges facing developers is ensuring that the state change response requirements are met. Although the LTE specifications have reduced the number of states that a handset can be in to RRC_IDLE and RRC_CONNECTED, the time it takes to change from one to the other will be a major part of the delay budget when data needs to be sent (see Figure 3). In RRC_IDLE mode, as much of the device as possible will be in a low power consumption state to ensure good battery life, with only the receiver activated

periodically to check for paging messages. When data transmission is to be scheduled, the device must wake up and rapidly synchronize its uplink.

Conclusion

As LTE rapidly emerges from the standardization process it brings with it a new generation of technical problems that need to be solved. The initial LTE baseline is now frozen; however, significant challenges remain to realize the specification and bring robust LTE products to market. Today LTE user data rates nearing 100 Mbps have been achieved with real infrastructure, 150 Mbps is already available on test mobiles. It is essential, therefore, that any test equipment is based on a platform that can be easily upgraded to support the higher data rates required and track the progression of LTE testing both on the handset and basestation.

Phil Medd is product manager of Aeroflex Test Systems and Nick Carter is product manager of Aeroflex System Test Products.

Source URL (retrieved on *07/23/2014 - 12:40pm*):
http://www.wirelessdesignmag.com/articles/2009/08/challenges-lte-basestation-and-handset-testing

Links:
[1] http://www.wirelessdesignmag.com/sites/wirelessdesignmag.com/files/legacyimages/0908/Aeroflex1_lrg.gif
[2] http://www.wirelessdesignmag.com/sites/wirelessdesignmag.com/files/legacyimages/0908/Aeroflex2_lrg.gif
[3] http://www.wirelessdesignmag.com/sites/wirelessdesignmag.com/files/legacyimages/0908/Aeroflex3_lrg.gif