LTE Testing Challenges

Working closely with the test equipment vendor is required in order to synchronize feature implementation, reference specifications and timely delivery of the test equipment software.

By Paul Gooding, Rohde & Schwarz

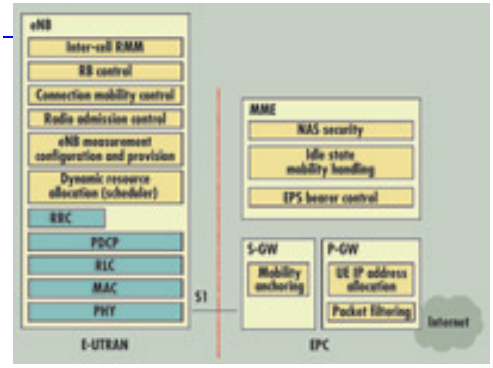

[1]

LTE (Long Term Evolution) is a Mobile Broadband standard defined by the 3rd Generation Partnership Project (3GPP). LTE is so named because it is an evolution from previous wireless technology specifications (GSM/EDGE, WCDMA, HSPA and HSPA+). The LTE air interface is defined in Release 8 of the 3GPP Specifications.

In order to meet the high data rate, and spectral efficiency requirements, LTE utilizes OFDMA in the downlink (DL) and SC-FDMA in the uplink (UL). LTE also specifies multi-antenna operation (MIMO). The overall result is that LTE will provide downlink data rates of up to 150 Mb/s (with 2x2 MIMO) and uplink rates up to 75 Mb/s. with latency times of less than 10 ms.

OFDMA basically splits the overall system bandwidth into a number of sub-carriers that support various modulation schemes (QPSK, 16QAM, 64QAM). By providing a number of sub-carriers, the overall robustness of the radio link is improved since each sub-carrier transports data at a relatively low data rate while achieving a higher cumulative data rate.

LTE is specified to operate at frequencies from around 700 MHz to 3 GHz to provide allocation flexibility of frequencies for network operators. In addition to the high number of frequency bands that can be utilized, the bandwidth used for a particular cell is scaleable from 1.5 to 20 MHz. LTE can also be implemented in paired (FDD) or un-paired (TDD) mode.

LTE is defined as a purely packet data system, and all services, including voice, video and messaging, are IP based. LTE is supported by an Evolved Packet Core

(EPC) network (see Figure 1.)

Logistic Challenges

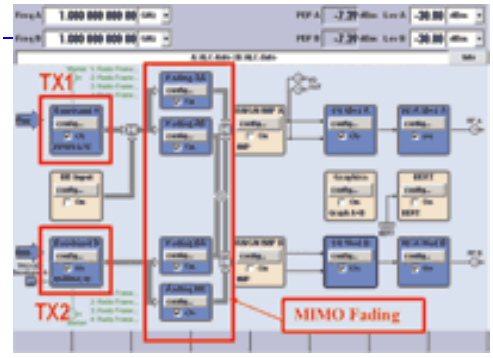

[2]

Eventually there will be complete suites of LTE device tests, both RF and protocol, that will be specified by 3GPP. These will form the basis of certification testing of LTE devices and will be released as TTCN-3 source code. Before these tests are available, LTE device developers need to test their LTE implementations and therefore test equipment is required. This presents its own logistical problems, LTE is a new technology, and the specifications are still evolving. There are updated versions of the Release 8 specifications released every 3 months in addition to possible change requests between these releases. During development, decisions have to be made about which specifications and change requests are going to be used for a particular software release. A close working relationship with the test equipment vendor is required to synchronize feature implementation, reference specifications and timely delivery of the test equipment software.

3GPP will eventually release certification test cases. With careful selection, the same test equipment can be utilized throughout the LTE product development lifecycle, from early physical layer testing to conformance tests.

Physical Layer Testing

In the early stages of device development, basic testing of UL and DL channels and signals is required. Signal generators that support LTE can be used to generate the DL, and spectrum analyzers can be used to verify the device UL. Since MIMO is incorporated into the LTE specification, a signal generator that supports MIMO is required. Digital IQ and RF interfaces may also be required depending on when RF is completed in the product development cycle. Additionally, fading effects should be tested with a signal generator supporting multi-path fading. Figure 2 provides an example of a signal generator user interface with MIMO and multi-path fading.

LTE Protocol Testers

Figure 3: Rohde & Schwarz R&S CMW 500 Protocol Tester

Physical channels can be verified and data transfer tested with a signal generator and spectrum analyzer. However to move to complete LTE testing, including protocol and physical layer, procedures that require UL /DL interaction (such as HARQ, RACH procedure), an LTE Protocol Tester is required.

LTE protocol testers basically emulate a Base Station (eNodeB) and some of the core network entities such as NAS and the Gateway. If a protocol tester can be also be used for physical layer testing, then this is obviously an advantage. For example, the R&S CMW500 (see Figure 3) also provides technology specific RF measurement capabilities such as power and signal quality measurements in addition to physical layer testing.

Protocol testers will provide an application programming interface (API) used for developing test scenarios. The interface will be platform specific, but a TTCN-3 interface will also be required in order that the 3GPP Conformance Tests can be run and, ideally, the platform itself is certified by the conformance test bodies.

It should be considered that other groups may influence LTE test cases as well. Network Operators, for example, may define LTE test cases that devices must pass before being allowed on their network. The LSTI (LTE/SAE Trials Initiative) group is currently working on a set of LTE test procedures for interoperability testing purposes. These will be made available on the Rohde & Schwarz R&S CMW 500 Protocol Tester. These include basic tests, such as cell search and bearer setup to more complex scenarios such as mobility.

An LTE protocol tester should be capable of supporting not only multiple LTE cells, but also multiple technologies simultaneously in order to provide InterRAT testing.

Protocol Testing

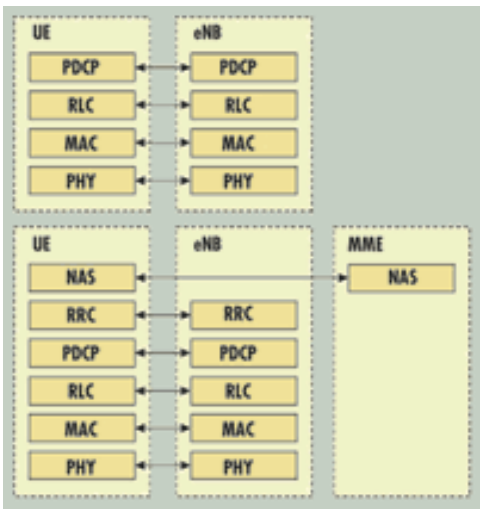

[3]

The layer structure for LTE protocol is given in Figure 4. The layer 2 definitions (MAC, RLC and PDCP) are now well defined for LTE while the Layer 3 signaling (RRC and NAS) is still being defined. In a full LTE implementation, the configuration of the Layer 2 is controlled by the RRC and the signaling between the RRC elements in the eNodeB and the UE. However, the UE layer 2 can be tested in isolation of signaling by pre-configuring layer 2 in the test equipment and the UE. This requires a programming interface in the protocol tester that allows low level control of layer 2. The LTE layer 2 can operate in many modes and each has to be tested. For example, in RLC acknowledged mode (RLC-AM), the RLC is responsible for discarding duplicate packets of data, and the in sequence delivery of packets. In order to test these kinds of features, flexible test equipment is required that provides a programming interface that can configure the RLC to behave incorrectly, e.g. generate duplicate packets or send packets out of sequence.

Layer 3 test scenarios cover procedures including network attach, authentication, security and call setups (end-to-end connection). Since LTE is basically an IP core network, the protocol tester must provide end-to-end application testing functionality such as Voice over IP, FTP or video streaming. The test equipment should allow high level signaling scenario test cases to be composed (at the RRC/NAS signaling level). In the event a test fails, then the tester needs to determine the reason using powerful message analysis and debugging tools.

Virtual Testing

During the development stages of an LTE device, the physical layer will probably be developed in parallel to the upper layers. It is possible to test the upper layers without the presence of the physical layer by using ‘virtual' test software. In a virtual test system, the physical link between the MAC layers of the test software and the UE protocol stack is replaced by a software connection (usually IP). Protocol testing can then take place in a purely software environment.

Conclusion

With the many challenges presented with LTE testing, it is important to give careful consideration to the selection of test equipment. Can the test equipment be used as

a conformance test platform, support LTE data rates, provide RF testing capability, replicate fading scenarios, test virtually and support inter-RAT? These are just a few of the questions that should be asked.

Paul Gooding is a product line engineer providing technical support for Rohde & Schwarz's suite of LTE test equipment.

Source URL (retrieved on *07/28/2014 - 6:21am*):
http://www.wirelessdesignmag.com/articles/2009/02/lte-testing-challenges?qt-digital_editions=0

Links:
[1] http://www.wirelessdesignmag.com/sites/wirelessdesignmag.com/files/legacyimages/0902/wd92_designtalk_1_lrg.jpg
[2] http://www.wirelessdesignmag.com/sites/wirelessdesignmag.com/files/legacyimages/0902/wd92_designtalk_2_lrg.gif
[3] http://www.wirelessdesignmag.com/sites/wirelessdesignmag.com/files/legacyimages/0902/wd92_designtalk_4_lrg.gif